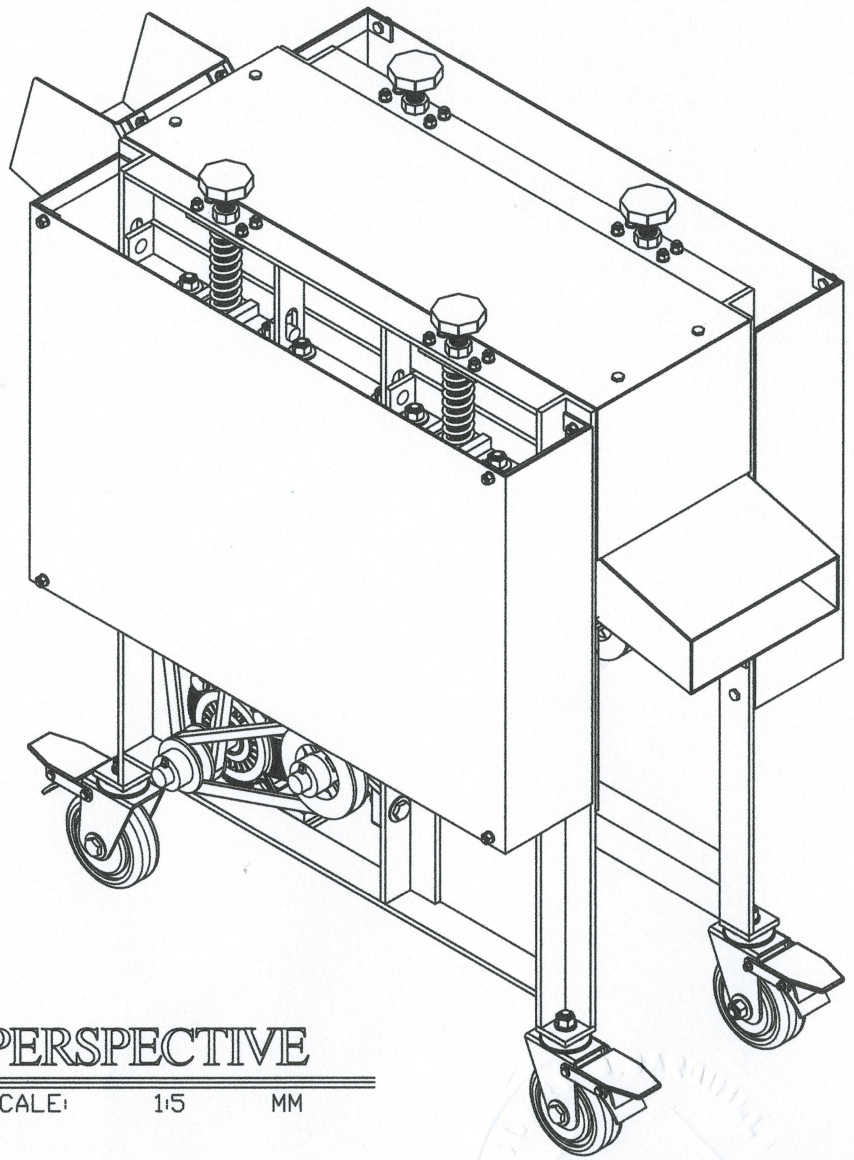

PERSPECTIVE

SCALE: 1:5 MM

OWNER:	PROJECT TITLE:	SHEET CONTENTS:	DRAWN BY:		RECOMMENDING APPROVAL:	APPROVED BY:	SHEET NO.:
PHILIPPINE FIBER INDUSTRY DEVELOPMENT AUTHORITY 3/F PCAF BUILDING, DA COMPOUND, ELLIPTICAL ROAD DILIMAN, QUEZON CITY	BAMBOO FIBER EXTRACTING MACHINE	AS SHOWN	ENGR. CLARK B. BARQUILLA	CLARK B. BARQUILLA PROFESSIONAL AGRICULTURAL BIOSYSTEMS ENGINEER	REMEDIOS V. ABGOMA, PhD CHIEF, FIBER UTILIZATION AND TECHNOLOGY DIVISION	KENNETH M. DOSTALES EXECUTIVE DIRECTOR III	1 20
			CHECKED BY: ENGR. RAMIL P. BARCELONA	PRC: 7711 PTR: TIN: DATE EXPIRED: APRIL 28, 2023			

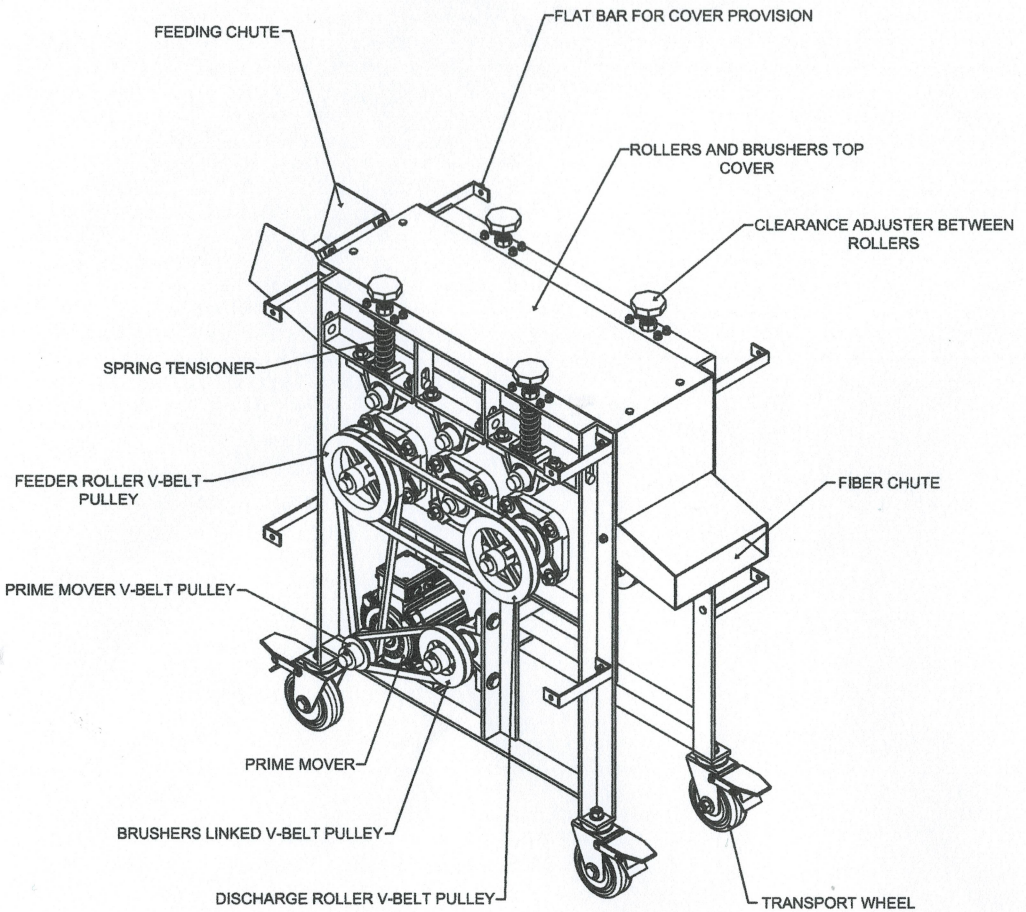

RIGHT SIDE PERSPECTIVE VIEW
SCALE: 1:8 MM

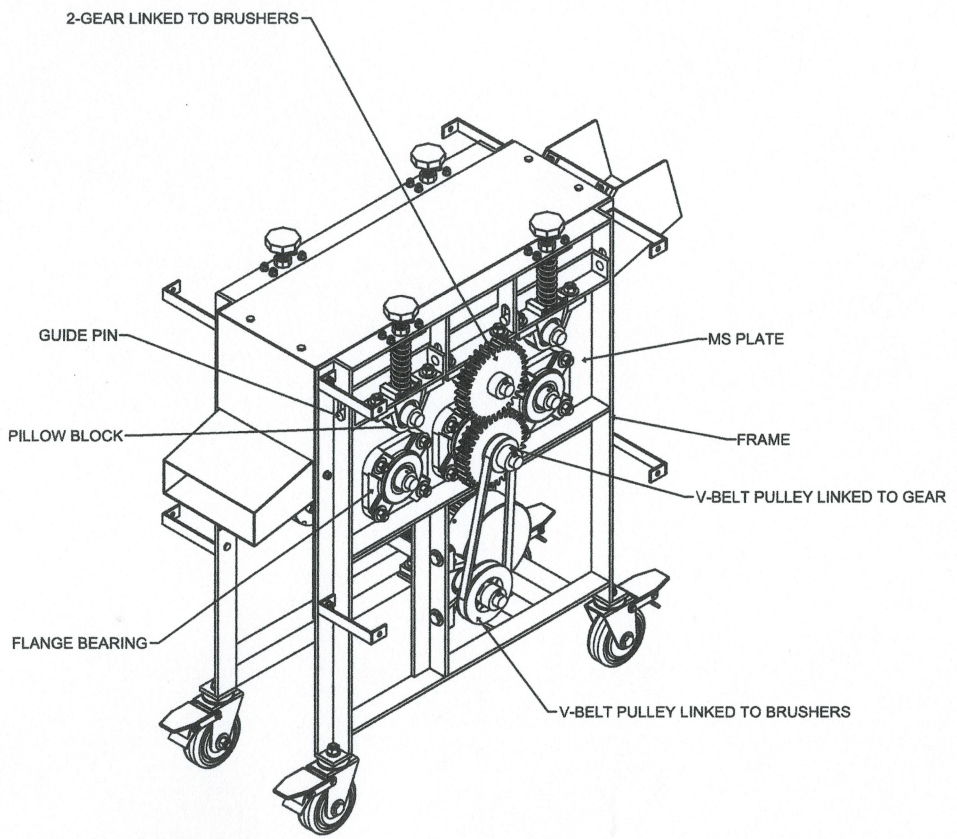

LEFT SIDE PERSPECTIVE VIEW
SCALE: 1:8 MM

NOTES:
Fabricator shall verify all dimensions and parts before all works are to begin.

Subject to actual verifications.

OWNER:	PROJECT TITLE:	SHEET CONTENTS:	DRAWN BY:	RECOMMENDING APPROVAL:	APPROVED BY:	SHEET NO.:
PHILIPPINE FIBER INDUSTRY DEVELOPMENT AUTHORITY 3/F PCAF BUILDING, DA COMPOUND, ELLIPTICAL ROAD DILIMAN, QUEZON CITY	BAMBOO FIBER EXTRACTING MACHINE	AS SHOWN	ENGR. CLARK B. BARQUILLA CHECKED BY: ENGR. RAMIL B. BARCELONA	CLARK B. BARQUILLA PROFESSIONAL AGRICULTURAL BIOSYSTEMS ENGINEER PRC: 7711 PTR: TIN: DATE EXPIRED: APRIL 28, 2023	REMEDIOS V. ABGONA, PhD CHIEF, FIBER UTILIZATION AND TECHNOLOGY DIVISION	KENNEDY T. COSTALES EXECUTIVE DIRECTOR III	2 20

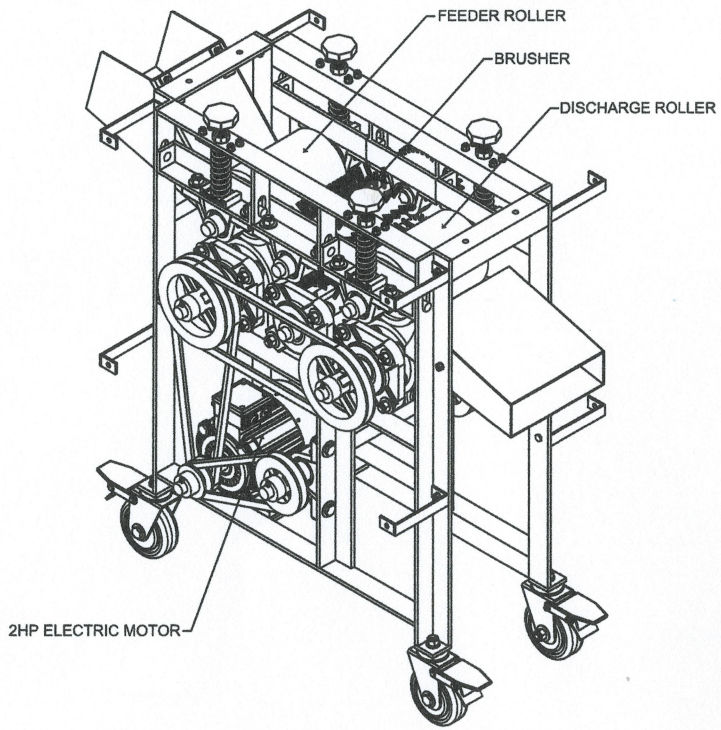

RIGHT SIDE PERSPECTIVE VIEW
SCALE: 1:8 MM

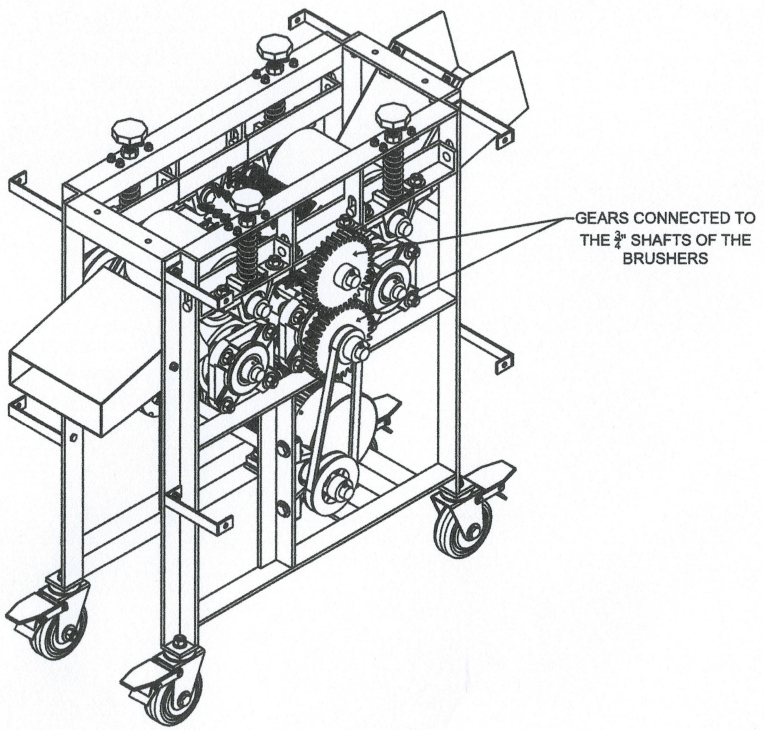

LEFT SIDE PERSPECTIVE VIEW
SCALE: 1:8 MM

NOTES:
Fabricator shall verify all dimensions and parts before all works are to begin.

Subject to actual verifications.

OWNER:	PROJECT TITLE:	SHEET CONTENTS:	DRAWN BY:	RECOMMENDING APPROVAL:	APPROVED BY:	SHEET NO.:
PHILIPPINE FIBER INDUSTRY DEVELOPMENT AUTHORITY 3/F PCAF BUILDING, DA COMPOUND, ELLIPTICAL ROAD DILIMAN, QUEZON CITY	BAMBOO FIBER EXTRACTING MACHINE	AS SHOWN	ENGR. CLARK B. BAROLILLA CHECKED BY: ENGR. RAMIL B. BARCELONA	CLARK B. BAROLILLA PROFESSIONAL AGRICULTURAL & BIOSYSTEMS ENGINEER PRC: 7711 PTR: TIN: DATE EXPIRED: APRIL 28, 2023 REMEDIOS V. ABGONA, PhD CHIEF, FIBER UTILIZATION AND TECHNOLOGY DIVISION	KENNEDY T. GONSALES EXECUTIVE DIRECTOR III	3 20

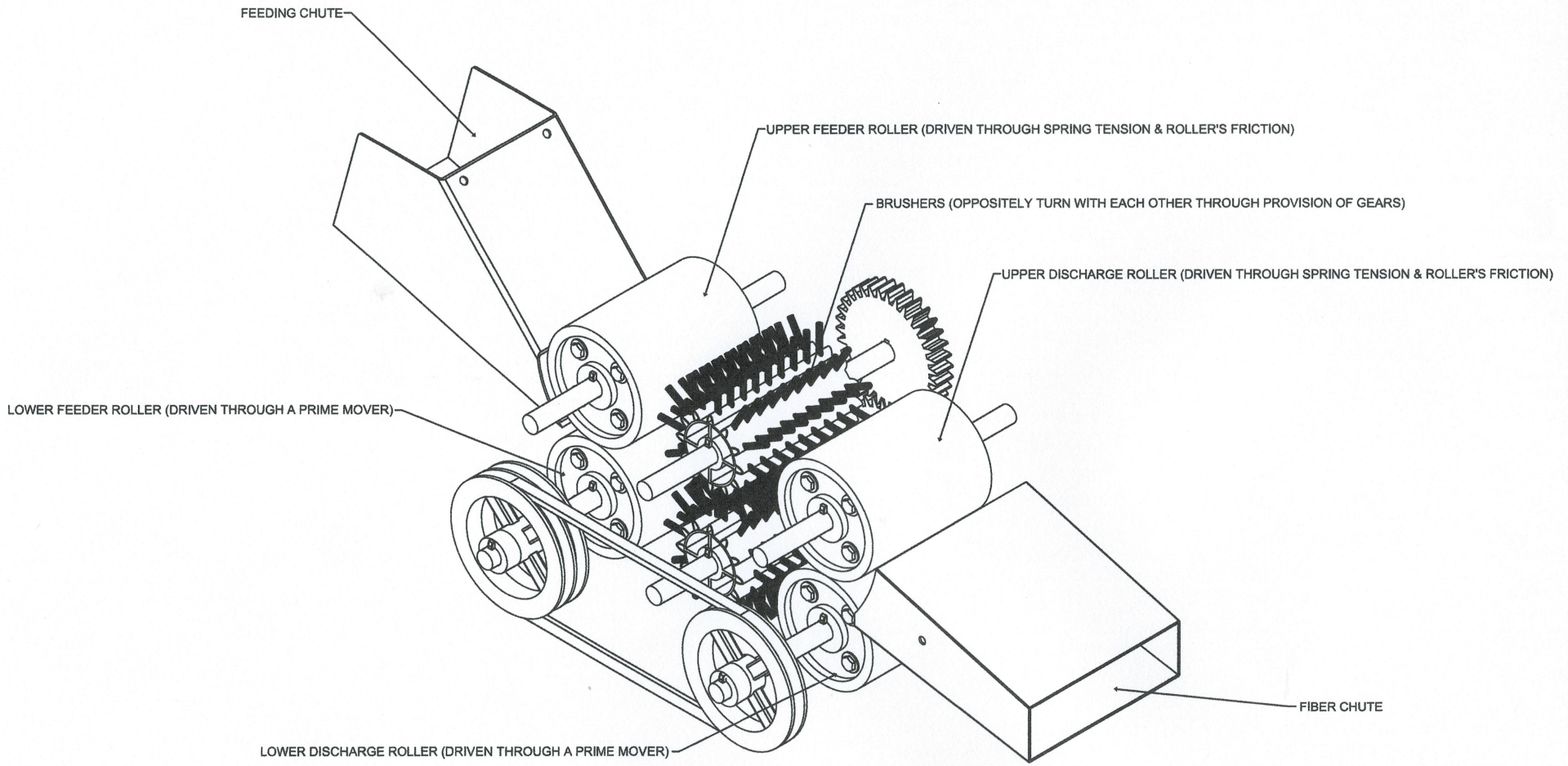

RIGHT SIDE PERSPECTIVE VIEW
SCALE: 1:4 MM

NOTES:
Fabricator shall verify all dimensions and parts before all works are to begin.

Subject to actual verifications.

OWNER:	PROJECT TITLE:	SHEET CONTENTS:	DRAWN BY:	RECOMMENDING APPROVAL:	APPROVED BY:	SHEET NO.:
PHILIPPINE FIBER INDUSTRY DEVELOPMENT AUTHORITY 3/F PCAF BUILDING, DA COMPOUND, ELLIPTICAL ROAD DILIMAN, QUEZON CITY	BAMBOO FIBER EXTRACTING MACHINE	AS SHOWN	ENGR. CLARK B. BARQUILLA CHECKED BY: ENGR. RAINIL B. BARCELONA	CLARK B. BARQUILLA PROFESSIONAL AGRICULTURAL & BIOSYSTEMS ENGINEER PRC: 7711 PTR: TIN: DATE EXPIRED: APRIL 28, 2023	REMEDIOS V. ABGUNA, PhD CHIEF, FIBER UTILIZATION AND TECHNOLOGY DIVISION	KENNEDY T. COSTALES EXECUTIVE DIRECTOR III	4 20

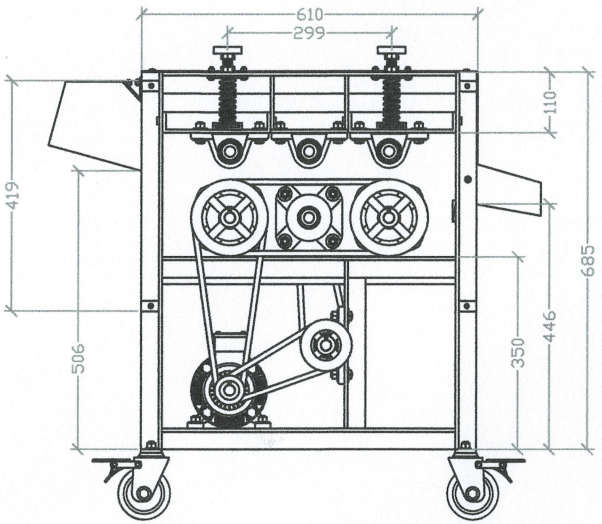

RIGHT SIDE VIEW
SCALE: 1:10 MM

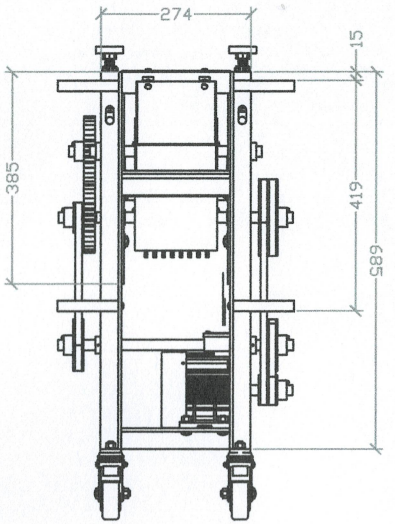

FRONT VIEW
SCALE: 1:10 MM

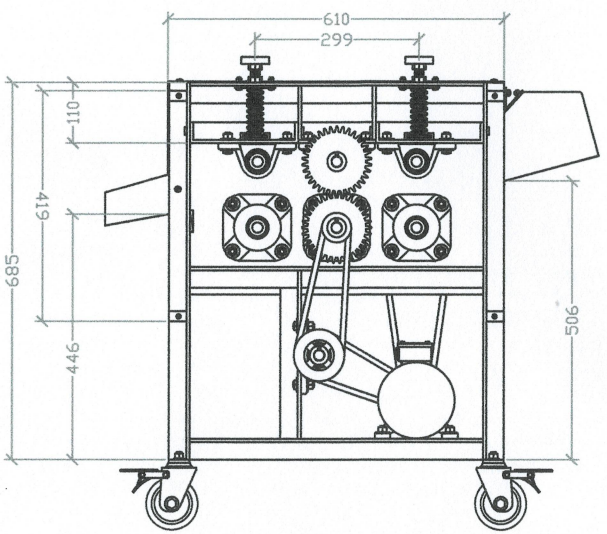

LEFT SIDE VIEW
SCALE: 1:10 MM

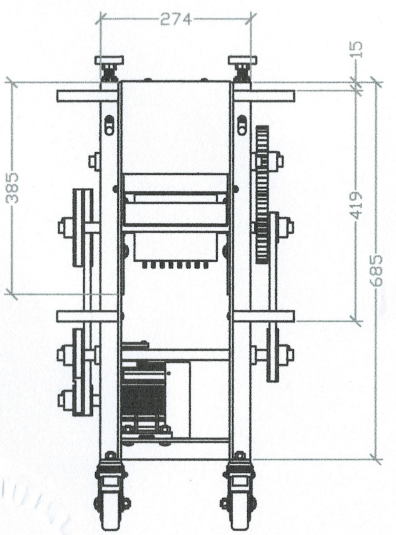

REAR VIEW
SCALE: 1:10 MM

NOTES:
Fabricator shall verify all dimensions and parts before all works are to begin.

Subject to actual verifications.

OWNER:	PROJECT TITLE:	SHEET CONTENTS:	DRAWN BY:	RECOMMENDING APPROVAL:	APPROVED BY:	SHEET NO.:
PHILIPPINE FIBER INDUSTRY DEVELOPMENT AUTHORITY 3/F PCAF BUILDING, DA COMPOUND, ELLIPTICAL ROAD DILIMAN, QUEZON CITY	BAMBOO FIBER EXTRACTING MACHINE	AS SHOWN	ENGR. CLARK B. BARQUILLA CHECKED BY: ENGR. RAMIL B. BARCELONA	CLARK B. BARQUILLA PROFESSIONAL AGRICULTURAL/BIOSYSTEMS ENGINEER PRC: 7711 PTR: TIN: DATE EXPIRED: APRIL 28, 2023 REMEDIOS V. ABGONA, PhD CHIEF, FIBER UTILIZATION AND TECHNOLOGY DIVISION	KENNEDY P. POSTALES EXECUTIVE DIRECTOR III	5 20

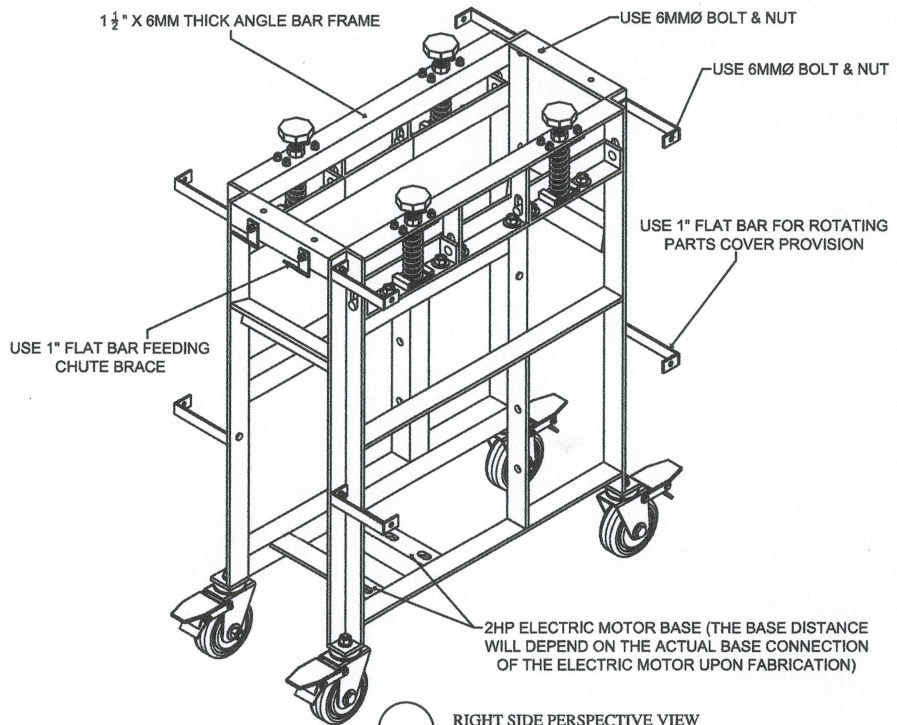

RIGHT SIDE PERSPECTIVE VIEW
SCALE: 1:8 MM

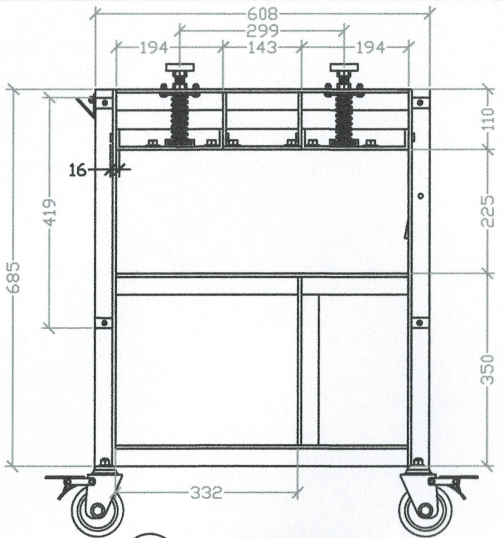

RIGHT SIDE VIEW
SCALE: 1:10 MM

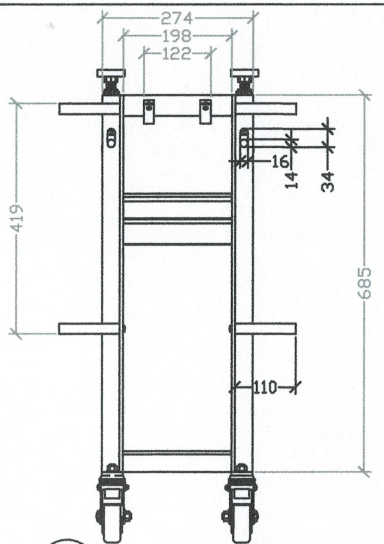

FRONT VIEW
SCALE: 1:10 MM

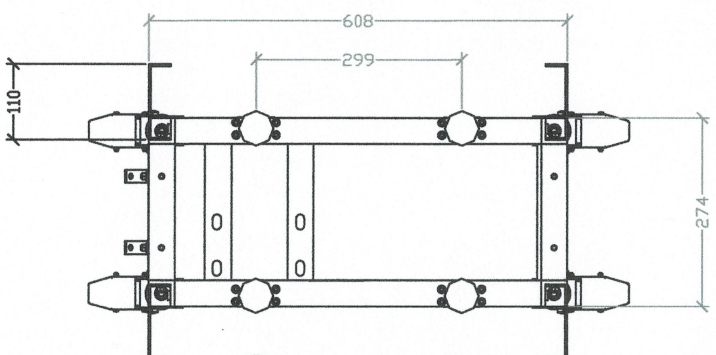

TOP VIEW
SCALE: 1:8 MM

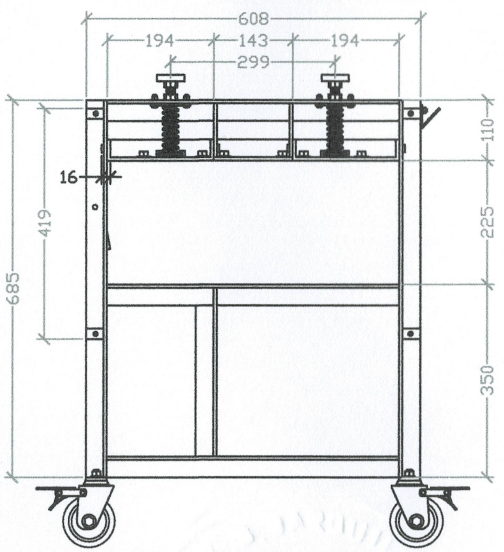

LEFT SIDE VIEW
SCALE: 1:10 MM

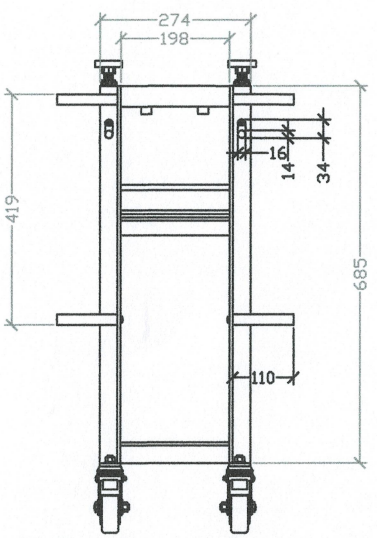

REAR VIEW
SCALE: 1:10 MM

NOTES:
Fabricator shall verify all dimensions and parts before all works are to begin.

Subject to actual verifications.

OWNER:	PROJECT TITLE:	SHEET CONTENTS:	DRAWN BY:	RECOMMENDING APPROVAL:	APPROVED BY:	SHEET NO.:
PHILIPPINE FIBER INDUSTRY DEVELOPMENT AUTHORITY 3/F PCAF BUILDING, DA COMPOUND, ELLIPTICAL ROAD DILIMAN, QUEZON CITY	BAMBOO FIBER EXTRACTING MACHINE	AS SHOWN	ENGR. CLARK B. BARQUILLA CHECKED BY: ENGR. RAMIL B. BARCELONA	CLARK B. BARQUILLA PROFESSIONAL AGRICULTURAL AND BIOSYSTEMS ENGINEER PRC: 7711 PTR: TIN: DATE EXPIRED: APRIL 28, 2023 REMEDIOS V. ABGONA, PhD CHIEF, FIBER UTILIZATION AND TECHNOLOGY DIVISION	KENNEDY P. COSTALES EXECUTIVE DIRECTOR III	6 20

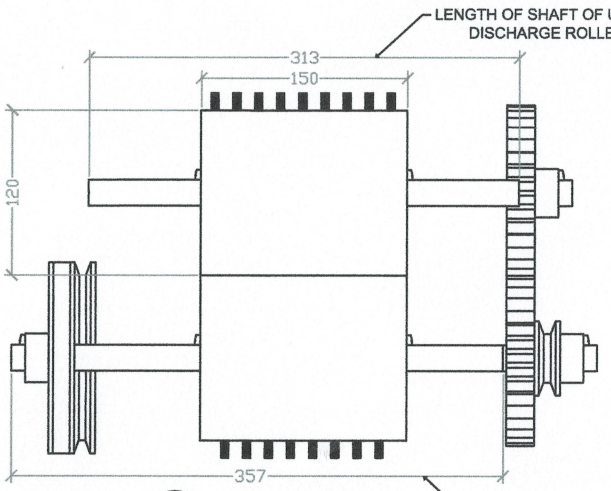

REAR VIEW
SCALE: 1:4 MM

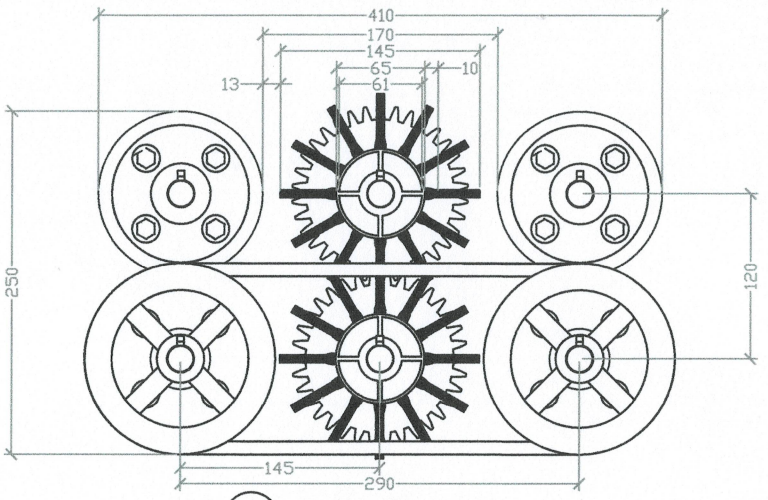

RIGHT SIDE VIEW
SCALE: 1:4 MM

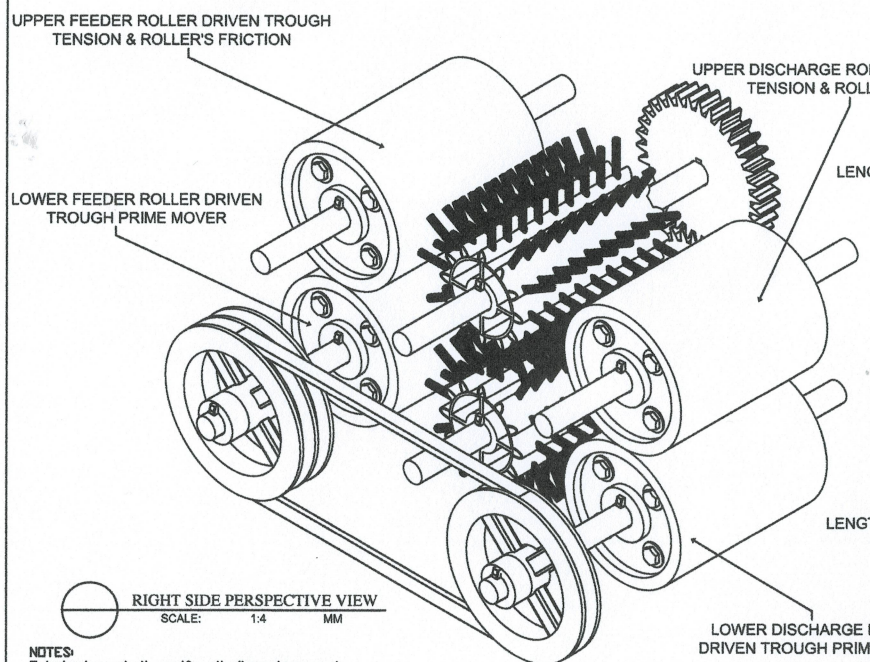

RIGHT SIDE PERSPECTIVE VIEW
SCALE: 1:4 MM

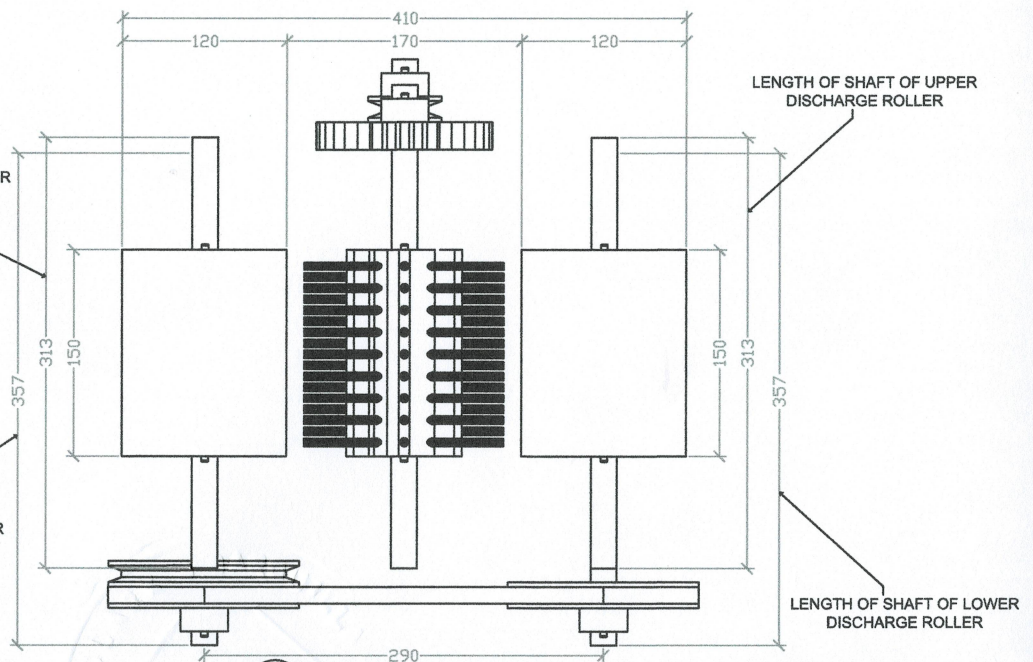

TOP VIEW
SCALE: 1:4 MM

NOTES:
Fabricator shall verify all dimensions and parts before all works are to begin.

Subject to actual verifications.

OWNER:	PROJECT TITLE:	SHEET CONTENTS:	DRAWN BY:	RECOMMENDING APPROVAL:	APPROVED BY:	SHEET NO.:
PHILIPPINE FIBER INDUSTRY DEVELOPMENT AUTHORITY 3/F PCAF BUILDING, DA COMPOUND, ELLIPTICAL ROAD DILIMAN, QUEZON CITY	BAMBOO FIBER EXTRACTING MACHINE	AS SHOWN	ENGR. CLARK B. BARQUILLA PROFESSIONAL AGRICULTURAL & BIOSYSTEMS ENGINEER PRC: 7711 PTR: TIN: DATE EXPIRED: APRIL 28, 2023 CHECKED BY: ENGR. RAMIL B. BARCELONA	REMEDIOS X. ABGONA, PhD CHIEF, FIBER UTILIZATION AND TECHNOLOGY DIVISION	KENNETH T. BOSTALES EXECUTIVE DIRECTOR III	7 20

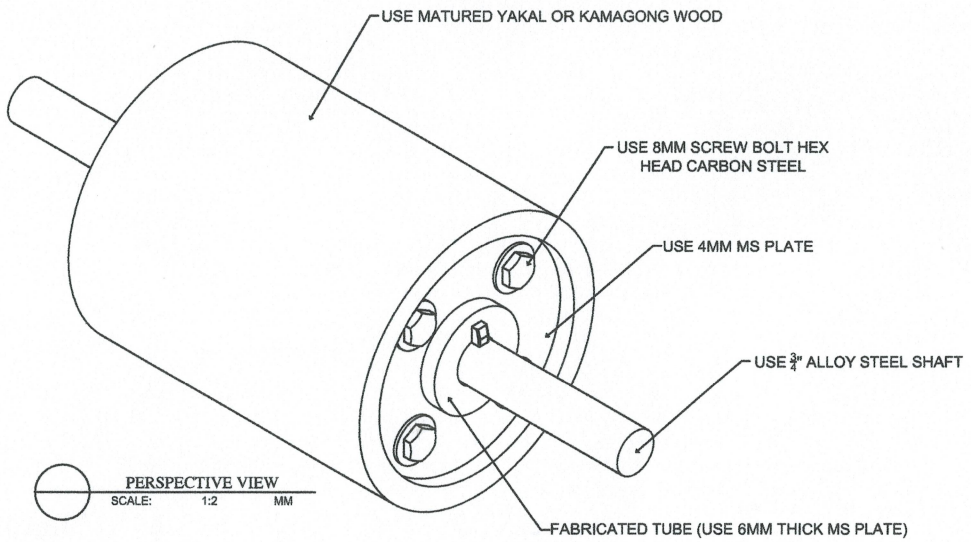

PERSPECTIVE VIEW
SCALE: 1:2 MM

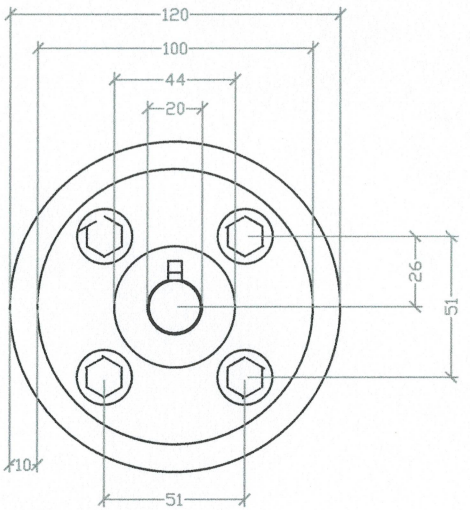

SIDE VIEW
SCALE: 1:2 MM

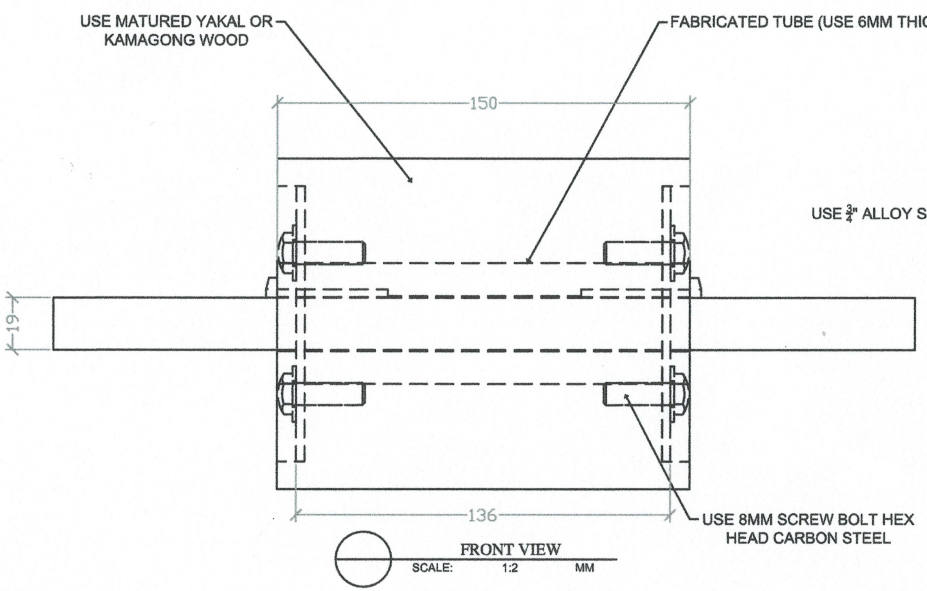

FRONT VIEW
SCALE: 1:2 MM

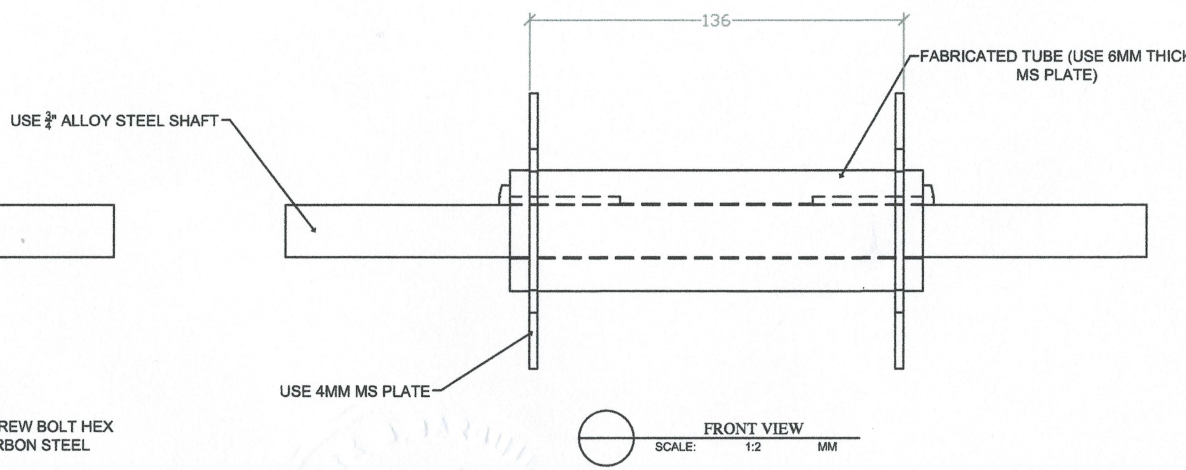

FRONT VIEW
SCALE: 1:2 MM

NOTES:
Fabricator shall verify all dimensions and parts before all works are to begin.

Subject to actual verifications.

OWNER:	PROJECT TITLE:	SHEET CONTENTS:	DRAWN BY:	RECOMMENDING APPROVAL:	APPROVED BY:	SHEET NO.:
PHILIPPINE FIBER INDUSTRY DEVELOPMENT AUTHORITY 3/F PCAF BUILDING, DA COMPOUND, ELLIPTICAL ROAD DILIMAN, QUEZON CITY	BAMBOO FIBER EXTRACTING MACHINE	AS SHOWN	ENGR. CLARK B. BABQUILLA CHECKED BY: ENGR. RAMIL B. BARCELONA	CLARK B. BABQUILLA PROFESSIONAL AGRICULTURAL & BIOSYSTEMS ENGINEER PRC: 7711 PTR: TIN: DATE EXPIRED: APRIL 28, 2023	REMEDIOS V. ABGOMA, PhD CHIEF, FIBER UTILIZATION AND TECHNOLOGY DIVISION	KENNEDY A. AGUSTALES EXECUTIVE DIRECTOR III	8 20

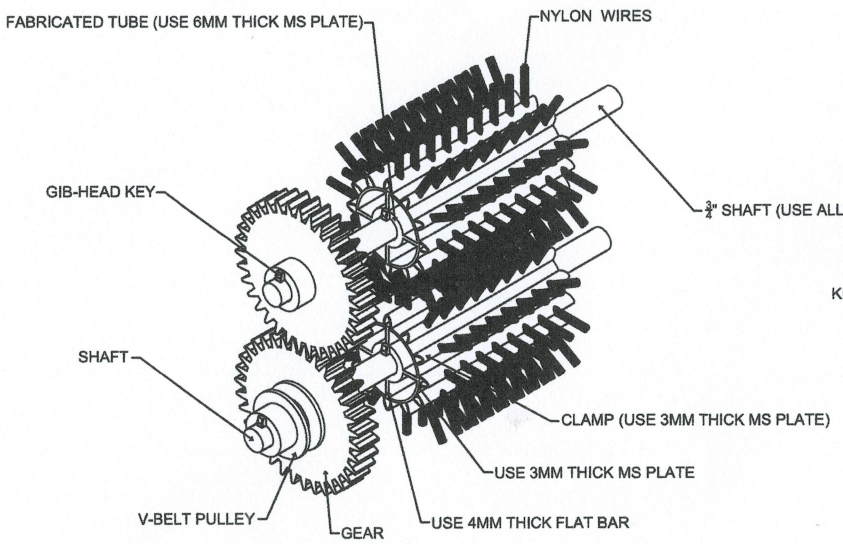

LEFT SIDE PERSPECTIVE VIEW
SCALE: 1:4 MM

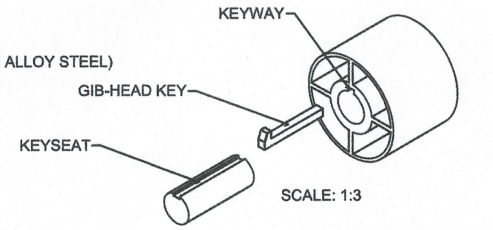

SCALE: 1:3

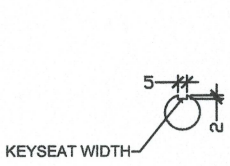

SCALE: 1:3

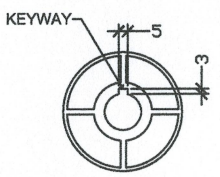

SCALE: 1:3

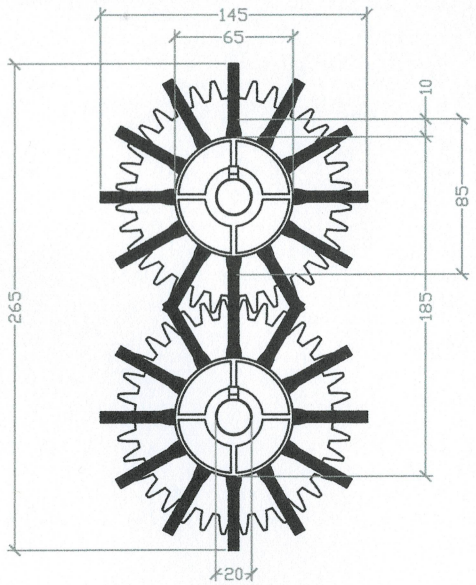

RIGHT SIDE VIEW
SCALE: 1:3 MM

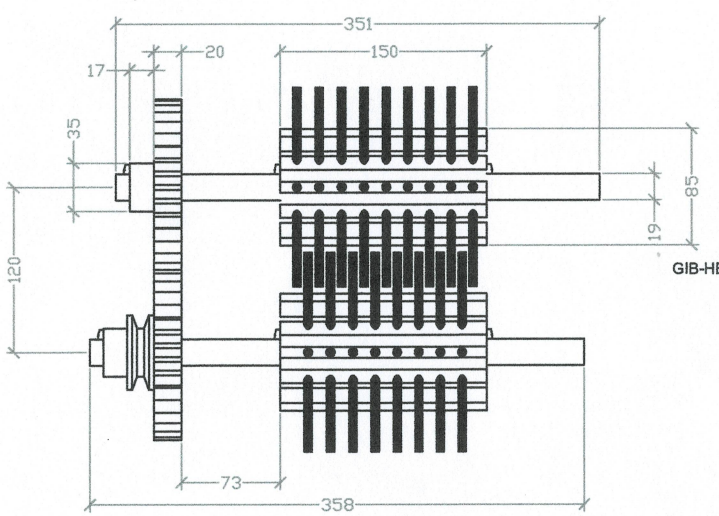

FRONT VIEW
SCALE: 1:4 MM

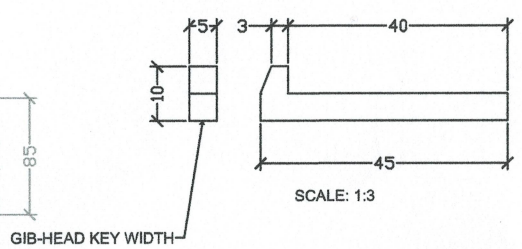

SCALE: 1:3

KEYSEAT, KEYWAY & GIB-HEAD KEY DETAILS

NOTE: KEYSEAT, KEYWAY & GIB-HEAD KEY FOR V-BELT PULLEYS MUST BE SETUP ACCORDING TO COMMERCIAL STANDARD SIZES AS BUILT TO COMMERCIAL STANDARD SIZES OF V-BELT PULLEYS.

NEED ACTUAL VERIFICATION BEFORE INSTALLATION OF PARTS

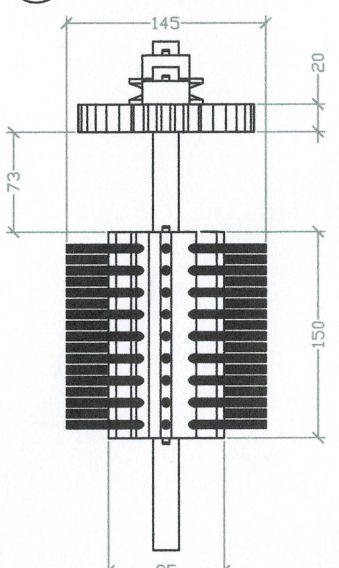

TOP VIEW
SCALE: 1:4 MM

NOTES:
Fabricator shall verify all dimensions and parts before all works are to begin.

Subject to actual verifications.

OWNER:	PROJECT TITLE:	SHEET CONTENTS:	DRAWN BY:	RECOMMENDING APPROVAL:	APPROVED BY:	SHEET NO.:
PHILIPPINE FIBER INDUSTRY DEVELOPMENT AUTHORITY 3/F PCAF BUILDING, DA COMPOUND, ELLIPTICAL ROAD DILIMAN, QUEZON CITY	BAMBOO FIBER EXTRACTING MACHINE	AS SHOWN	ENGR. CLARK B. BASQUILLA PROFESSIONAL AGRICULTURAL BIOSYSTEMS ENGINEER PRC: 7711 PTR: TIN: DATE EXPIRED: APRIL 28, 2023 CHECKED BY: ENGR. RAMIL B. BARCELONA	REMEDIOS V. ABGONA, PhD CHIEF, FIBER UTILIZATION AND TECHNOLOGY DIVISION	KENNEDY V. GONZALES EXECUTIVE DIRECTOR III	9 20

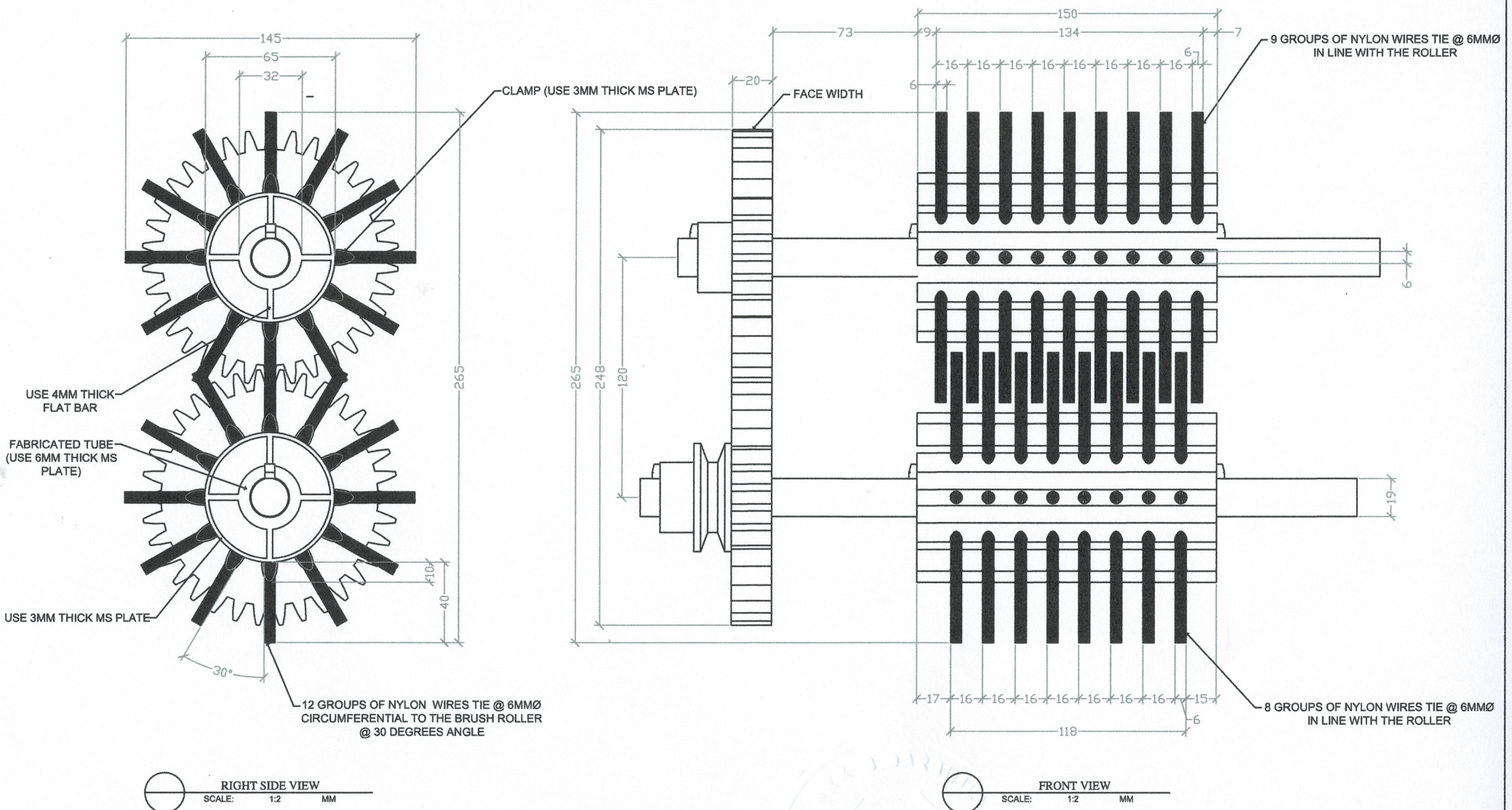

RIGHT SIDE VIEW
SCALE: 1:2 MM

FRONT VIEW
SCALE: 1:2 MM

NOTES:
Fabricator shall verify all dimensions and parts before all works are to begin.

Subject to actual verifications.

OWNER:	PROJECT TITLE:	SHEET CONTENTS:	DRAWN BY:	RECOMMENDING APPROVAL:	APPROVED BY:	SHEET NO.:
PHILIPPINE FIBER INDUSTRY DEVELOPMENT AUTHORITY 3/F PCAF BUILDING, DA COMPOUND, ELLIPTICAL ROAD DILIMAN, QUEZON CITY	BAMBOO FIBER EXTRACTING MACHINE	AS SHOWN	ENGR. CLARLIE B. BARQUILLA PROFESSIONAL AGRICULTURAL & BIOSYSTEMS ENGINEER PRC: 7711 PTR: TIN: DATE EXPIRED: APRIL 28, 2023	REMEDIOS V. ABGONA, PhD CHIEF, FIBER UTILIZATION AND TECHNOLOGY DIVISION	KENNEDY L. COSTALES EXECUTIVE DIRECTOR III	10 20
			CHECKED BY: ENGR. RAMIL S. BARCELONA			

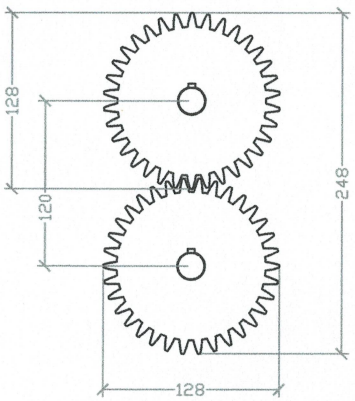

SIDE VIEW
SCALE: 1:4 MM

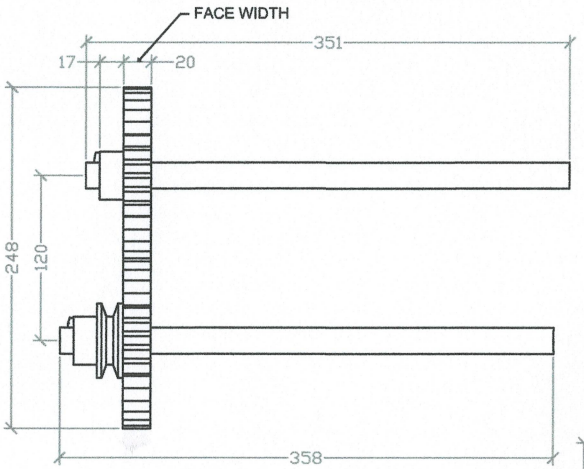

FRONT VIEW
SCALE: 1:4 MM

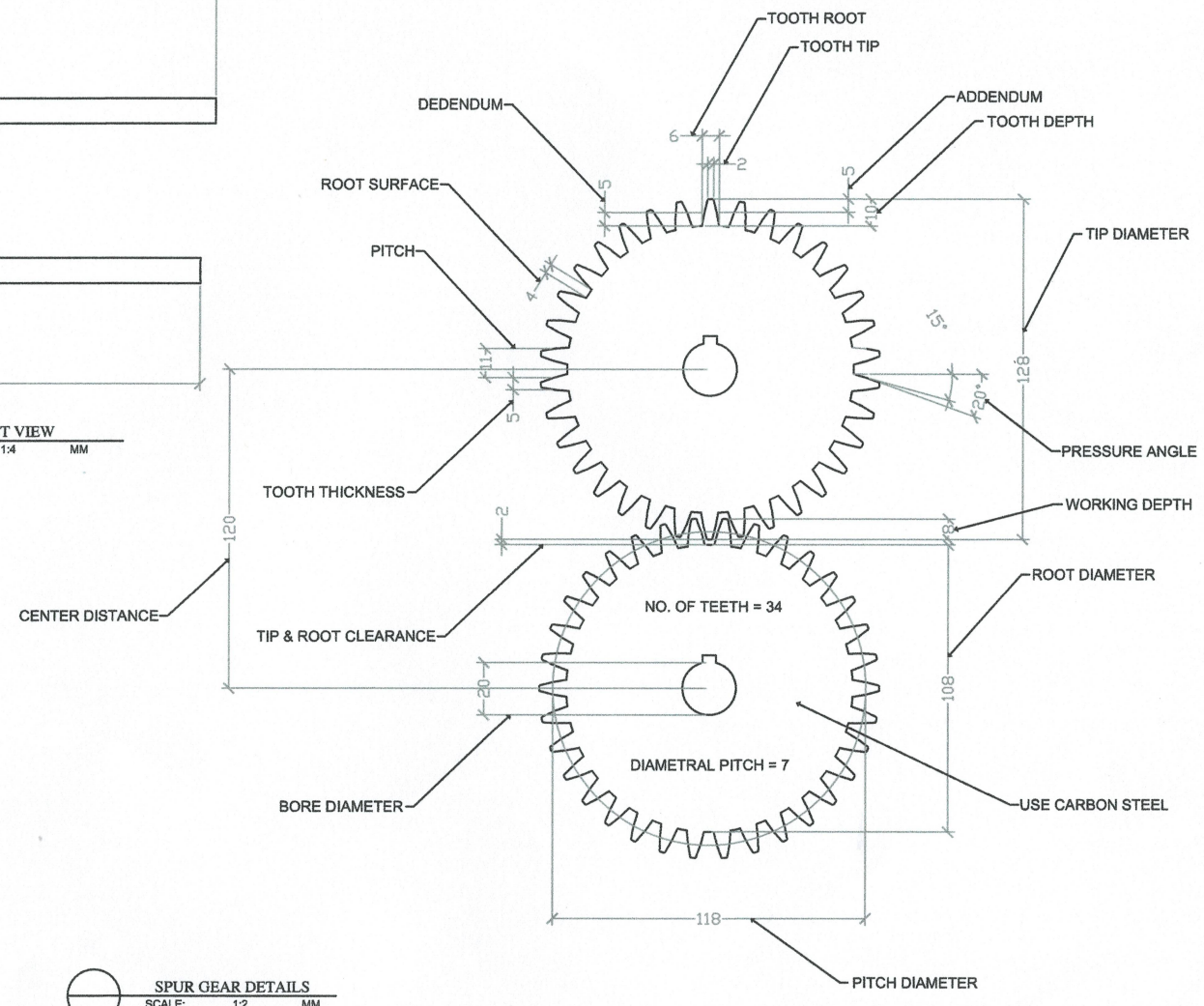

SPUR GEAR SPECIFICATION

MODULE	=	3.63
PRESSURE ANGLE	=	20 DEG
NO. OF TEETH	=	34
DIAMETRAL PITCH	=	7/INCH
REFERENCE/PITCH DIAMETER	=	118 MM
ADDENDUM	=	5 MM
DEDENDUM	=	5 MM
TOOTH DEPTH	=	10 MM
TIP DIAMETER	=	128 MM
ROOT DIAMETER	=	108 MM
CENTER DISTANCE	=	120 MM
BORE DIAMETER	=	20MM

SPUR GEAR DETAILS
SCALE: 1:2 MM

NOTES:
Fabricator shall verify all dimensions and parts before all works are to begin.

Subject to actual verifications.

OWNER:	PROJECT TITLE:	SHEET CONTENTS:	DRAWN BY:	RECOMMENDING APPROVAL:	APPROVED BY:	SHEET NO.:
PHILIPPINE FIBER INDUSTRY DEVELOPMENT AUTHORITY 3/F PCAF BUILDING, DA COMPOUND, ELLIPTICAL ROAD DILIMAN, QUEZON CITY	BAMBOO FIBER EXTRACTING MACHINE	AS SHOWN	ENGR. CLARK B. BARQUILLA CHECKED BY: ENGR. RAMIL B. BARCELONA	CLARK B. BARQUILLA PROFESSIONAL AGRICULTURAL & BIOSYSTEMS ENGINEER PRC: 7711 PTR: TIN: DATE EXPIRED: APRIL 28, 2023	REMEDIOS V. ABGONA, PhD CHIEF, FIBER UTILIZATION AND TECHNOLOGY DIVISION	KENNEDY V. CASTALES EXECUTIVE DIRECTOR III	11 20

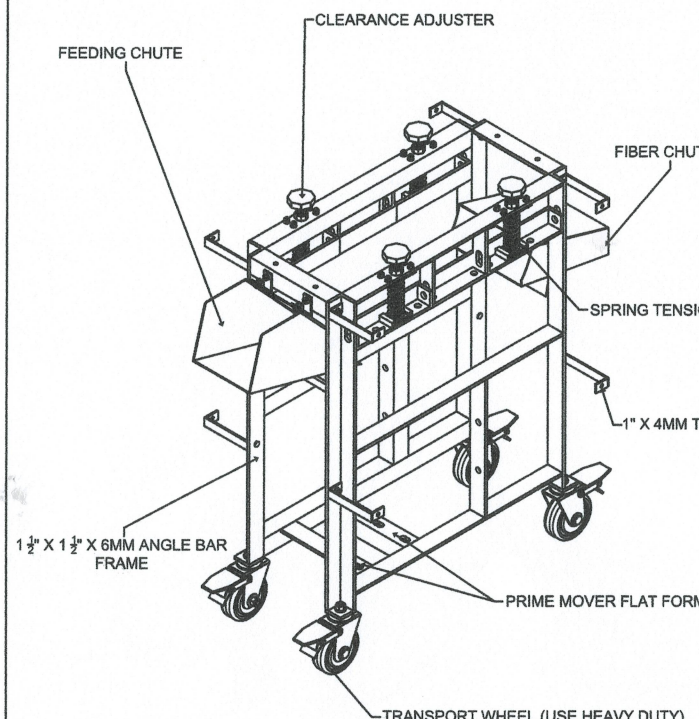

RIGHT SIDE PERSPECTIVE VIEW
SCALE: 1:10 MM

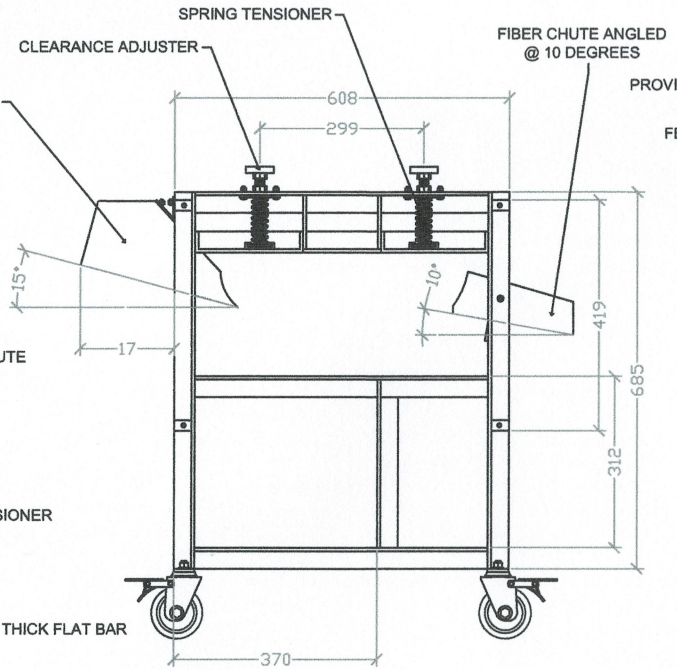

RIGHT SIDE VIEW
SCALE: 1:10 MM

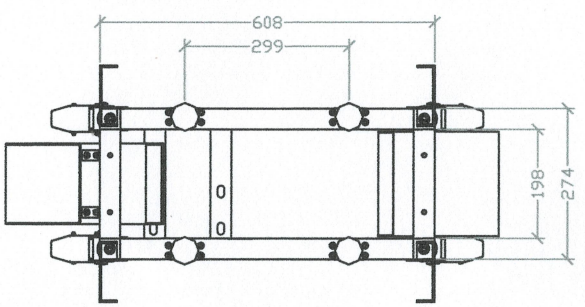

TOP VIEW
SCALE: 1:10 MM

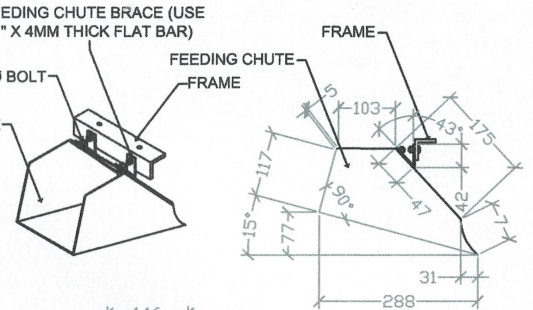

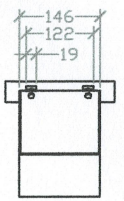

FEEDING CHUTE SPECIFICATION
SCALE: 1:10 MM

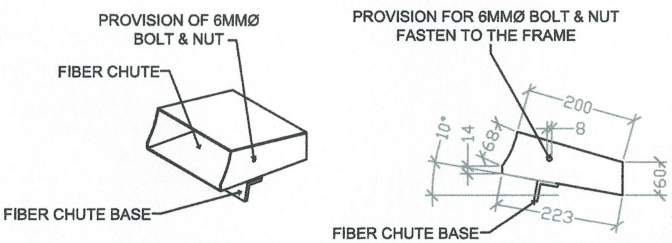

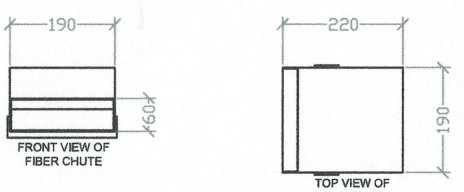

FIBER CHUTE SPECIFICATION
SCALE: 1:10 MM

NOTES:
Fabricator shall verify all dimensions and parts before all works are to begin.

Subject to actual verifications.

OWNER:	PROJECT TITLE:	SHEET CONTENTS:	DRAWN BY:	RECOMMENDING APPROVAL:	APPROVED BY:	SHEET NO.:
PHILIPPINE FIBER INDUSTRY DEVELOPMENT AUTHORITY 3/F PCAF BUILDING, DA COMPOUND, ELLIPTICAL ROAD DILIMAN, QUEZON CITY	BAMBOO FIBER EXTRACTING MACHINE	AS SHOWN	ENGR. CLARK B. BARQUILLA CHECKED BY: ENGR. RAMIL B. BARCELONA	CLARK B. BARQUILLA PROFESSIONAL AGRICULTURAL &BIOSYSTEMS ENGINEER PRC: 7711 PTR: TIN: DATE EXPIRED: APRIL 28, 2023	REMEDIOS V. ABGONA, PhD CHIEF, FIBER UTILIZATION AND TECHNOLOGY DIVISION	KENNEDY T. CUSTODES EXECUTIVE DIRECTOR III	12 20

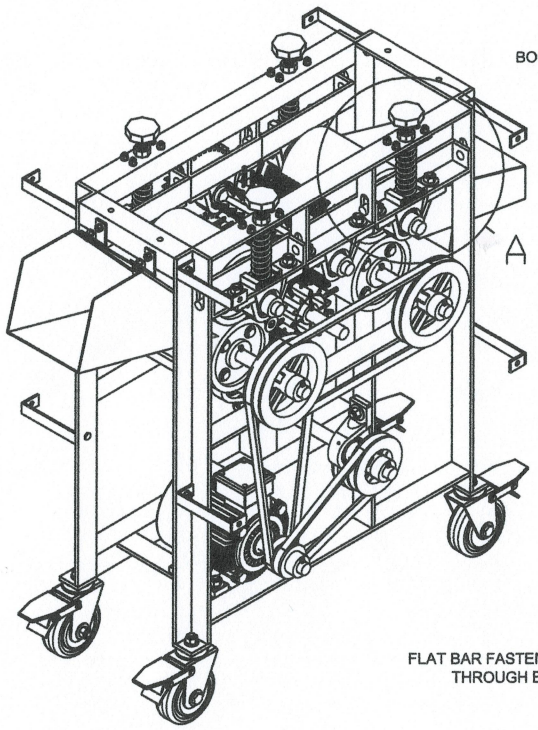

RIGHT SIDE PERSPECTIVE VIEW
SCALE: 1:8 MM

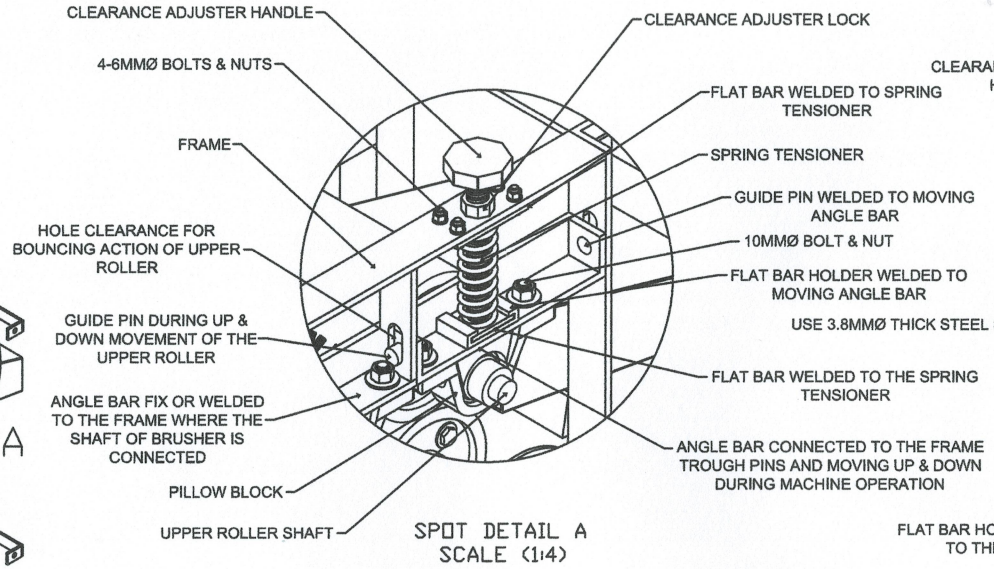

SPOT DETAIL A
SCALE (1:4)

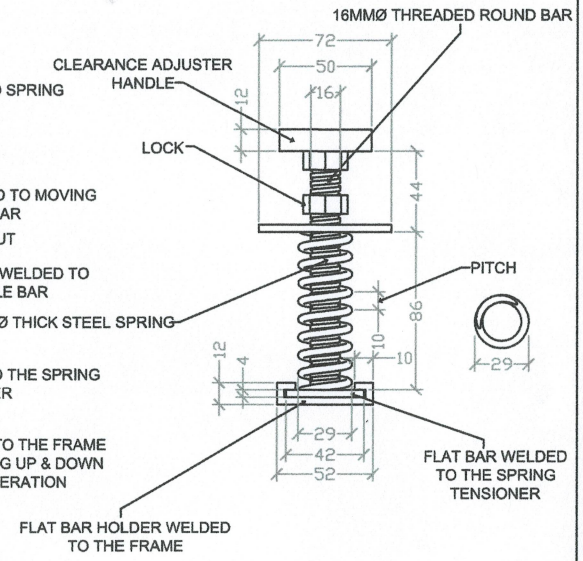

SIDE VIEW
SCALE: 1:3 MM

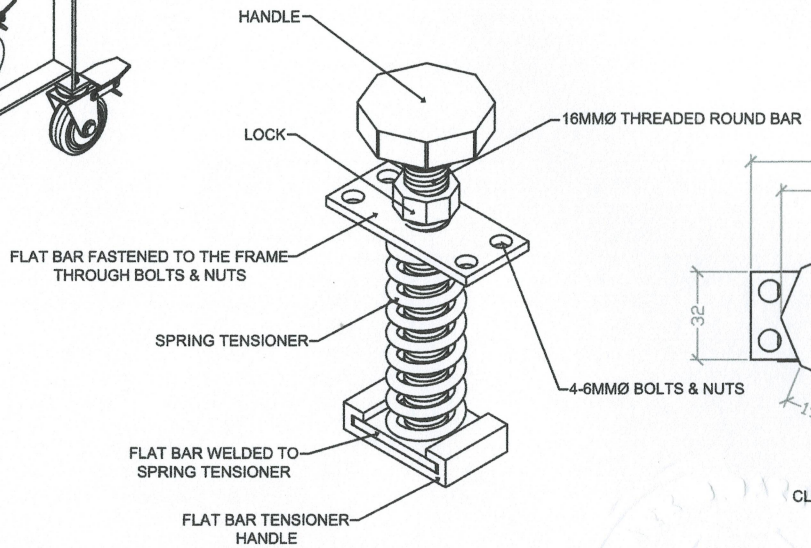

PERSPECTIVE VIEW
SCALE: 1:2 MM

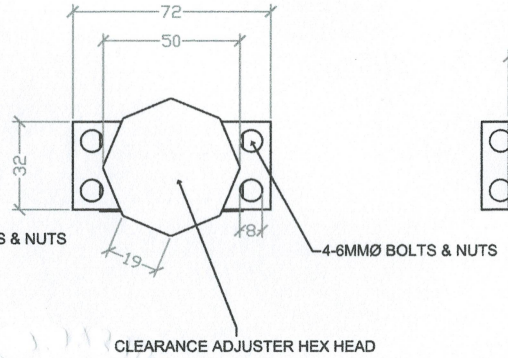

TOP VIEW
SCALE: 1:2 MM

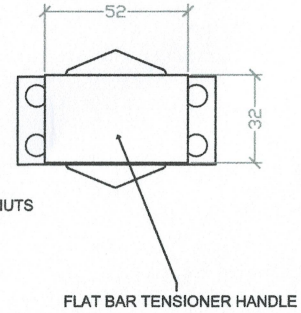

BOTTOM VIEW
SCALE: 1:2 MM

NOTES:
Fabricator shall verify all dimensions and parts before all works are to begin.

Subject to actual verifications.

OWNER:	PROJECT TITLE:	SHEET CONTENTS:	DRAWN BY:		RECOMMENDING APRROVAL:	APPROVED BY:	SHEET NO.:
PHILIPPINE FIBER INDUSTRY DEVELOPMENT AUTHORITY 3/F PCAF BUILDING, DA COMPOUND, ELLIPTICAL ROAD DILIMAN, QUEZON CITY	BAMBOO FIBER EXTRACTING MACHINE	AS SHOWN	ENGR. CLARK B. BARQUILLA CHECKED BY: ENGR. RAMIL B. BARCELONA	CLARK B. BARQUILLA PROFESSIONAL AGRICULTURAL & BIOSYSTEMS ENGINEER PRC: 7711 PTR: TIN: DATE EXPIRED: APRIL 28, 2023	REMEDIOS T. ABGONA, PhD CHIEF, FIBER UTILIZATION AND TECHNOLOGY DIVISION	KENNEDY T. COSTALES EXECUTIVE DIRECTOR III	13 20

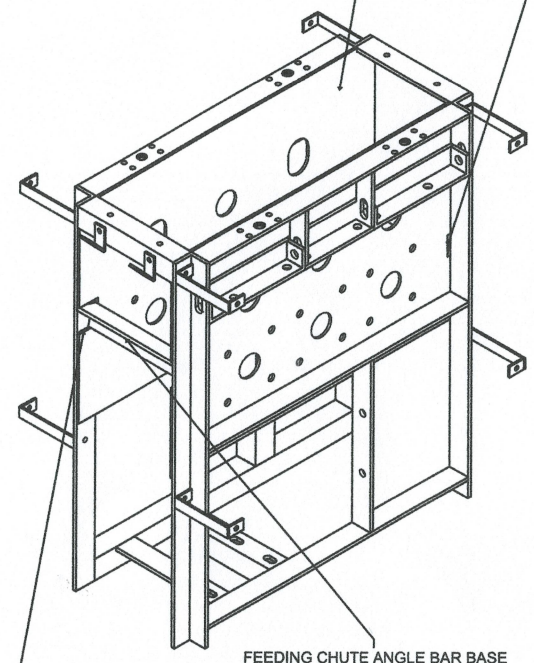

RIGHT SIDE PERSPECTIVE VIEW
SCALE: 1:8 MM

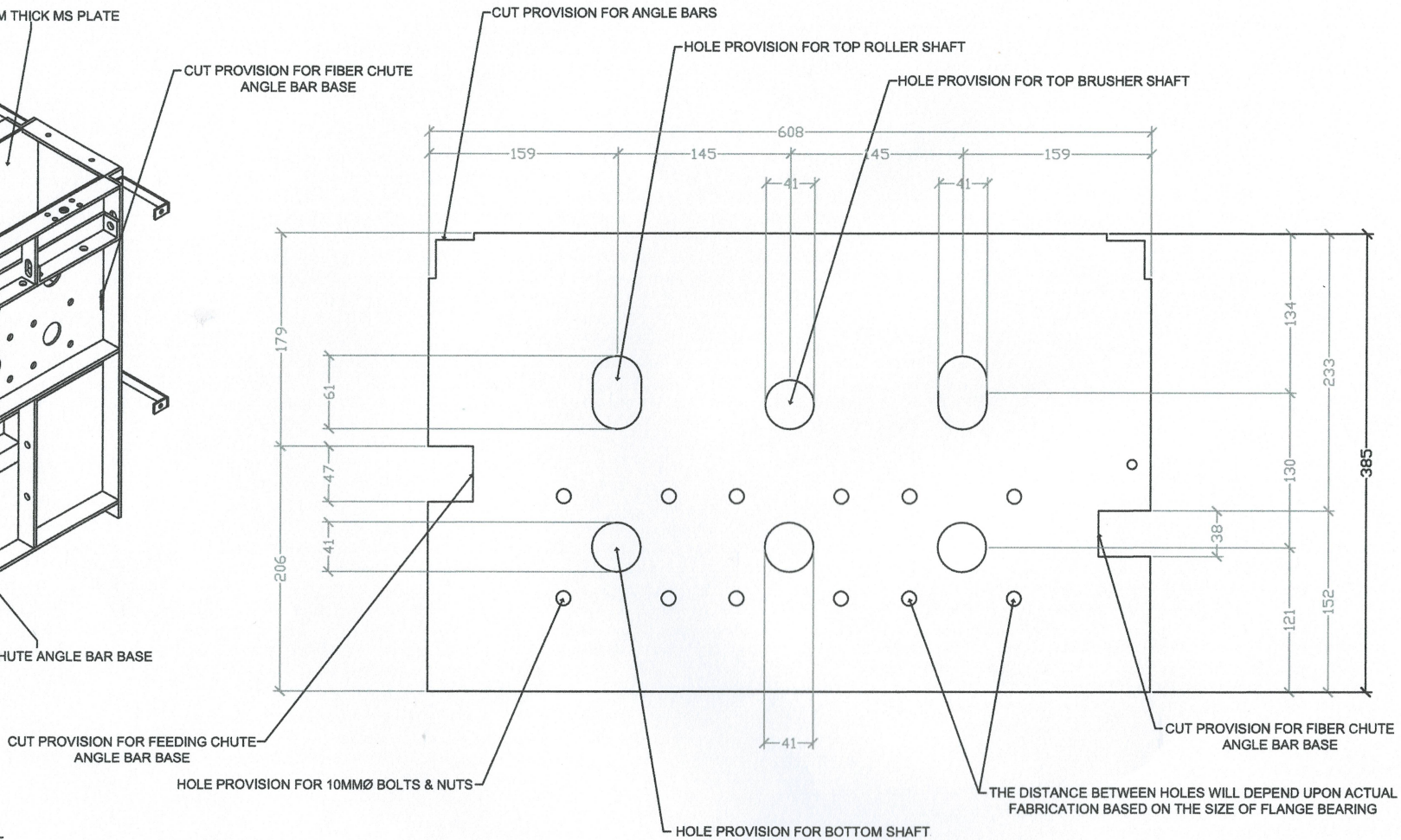

MS PLATE FRAME WALL SPECIFICATION
SCALE: 1:4 MM

NOTES:
Fabricator shall verify all dimensions and parts before all works are to begin.

Subject to actual verifications.

OWNER:	PROJECT TITLE:	SHEET CONTENTS:	DRAWN BY:	RECOMMENDING APPROVAL:	APPROVED BY:	SHEET NO.:
PHILIPPINE FIBER INDUSTRY DEVELOPMENT AUTHORITY 3/F PCAF BUILDING, DA COMPOUND, ELLIPTICAL ROAD DILIMAN, QUEZON CITY	BAMBOO FIBER EXTRACTING MACHINE	AS SHOWN	ENGR. CLARK B. BARCELONA CHECKED BY: ENGR. RAMIL B. BARCELONA	CLARK B. BARCELONA PROFESSIONAL AGRICULTURAL & BIOSYSTEMS ENGINEER PRC: 7711 PTR: TIN: DATE EXPIRED: APRIL 28, 2023	REMEDIOS V. ABGONA, PhD CHIEF, FIBER UTILIZATION AND TECHNOLOGY DIVISION	KENNEDY V. AGUSTALES EXECUTIVE DIRECTOR III	14 20

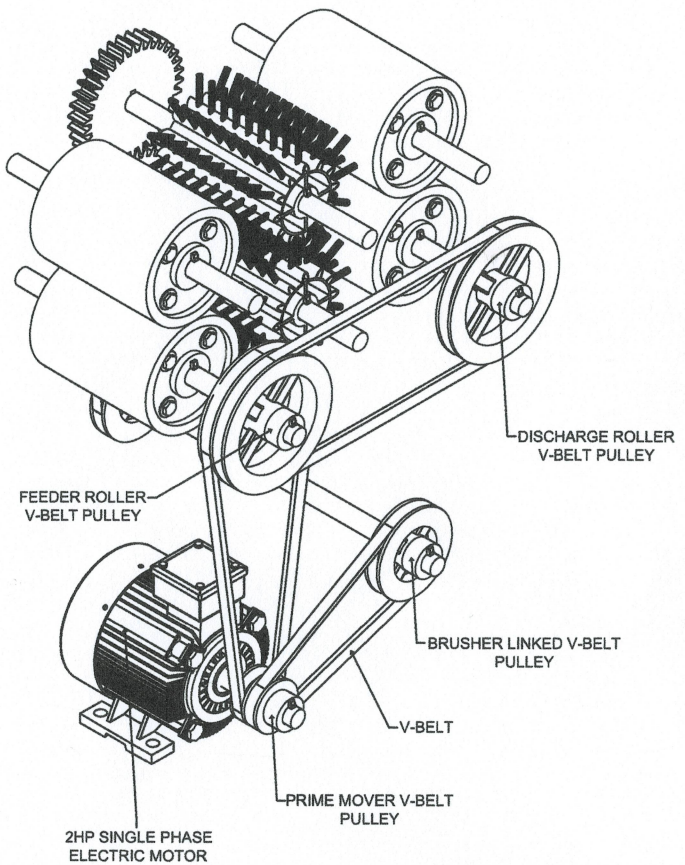

RIGHT SIDE PERSPECTIVE VIEW
SCALE: 1:5 MM

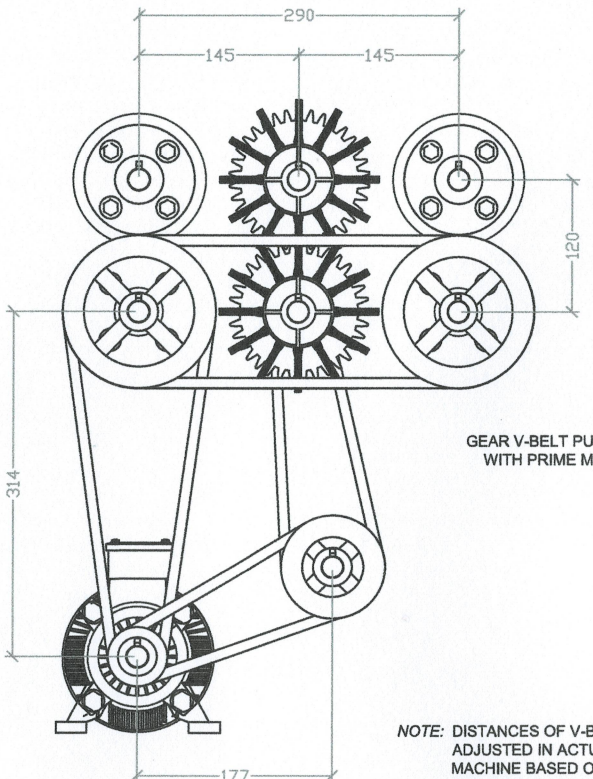

RIGHT SIDE VIEW
SCALE: 1:5 MM

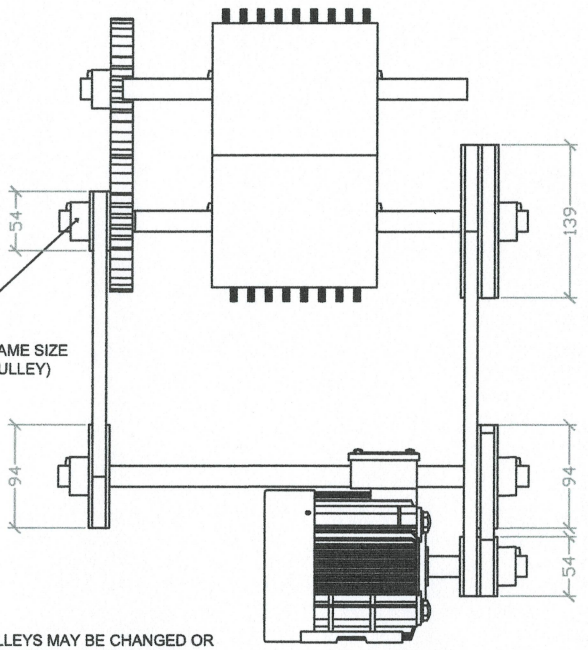

FRONT VIEW
SCALE: 1:5 MM

NOTE: DISTANCES OF V-BELT PULLEYS MAY BE CHANGED OR ADJUSTED IN ACTUAL UPON FABRICATION OF THE MACHINE BASED ON COMMERCIAL STANDARD SIZES OF PULLEYS AND V-BELTS

NEED ACTUAL VERIFICATION BEFORE INSTALLATION OF PARTS

NOTES:
Fabricator shall verify all dimensions and parts before all works are to begin.

Subject to actual verifications.

OWNER:	PROJECT TITLE:	SHEET CONTENTS:	DRAWN BY:	RECOMMENDING APPROVAL:	APPROVED BY:	SHEET NO.:
PHILIPPINE FIBER INDUSTRY DEVELOPMENT AUTHORITY 3/F PCAF BUILDING, DA COMPOUND, ELLIPTICAL ROAD DILIMAN, QUEZON CITY	BAMBOO FIBER EXTRACTING MACHINE	AS SHOWN	ENGR. CLARK B. BARQUILLA CHECKED BY: ENGR. RAMIL B. BARCELONA	CLARK B. BARQUILLA PROFESSIONAL AGRICULTURAL & BIOSYSTEMS ENGINEER PRC: 7711 PTR: TIN: DATE EXPIRED: APRIL 28, 2023 REMEDIOS V. ABGONA, PhD CHIEF, FIBER UTILIZATION AND TECHNOLOGY DIVISION	KENNEDY M. GONZALES EXECUTIVE DIRECTOR III	15 20

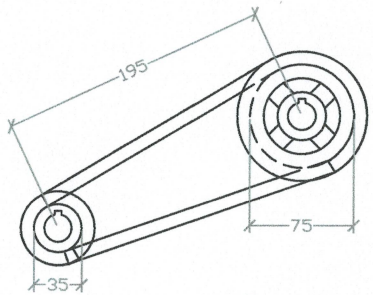

L = 2C+1.57(D+d)
= 2(195)+1.57(75+35)
= 390+1.57(110)
= 390+172.7
L = 562.7
V-BELT SIZE = B562 OR NEAR COMMERCIAL STANDARD SIZE

V-BELT B/W PRIME MOVER & BRUSHER LINKED PULLEYS
SCALE: 1:4 MM

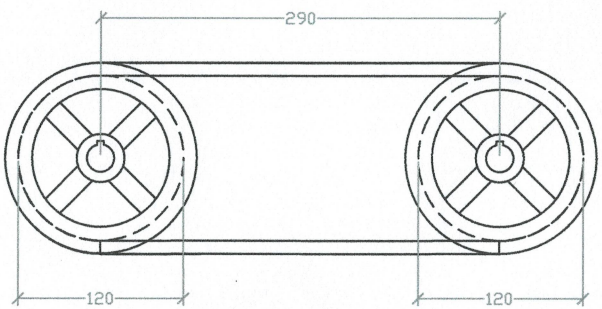

L = 2C+1.57(D+d)
= 2(290)+1.57(120+120)
= 580+1.57(240)
= 580+376.8
L = 956.8
V-BELT SIZE = B957 OR NEAR COMMERCIAL STANDARD SIZE

V-BELT B/W BOTTOM FEEDER ROLLER & BOTTOM DISCHARGE ROLLER
SCALE: 1:4 MM

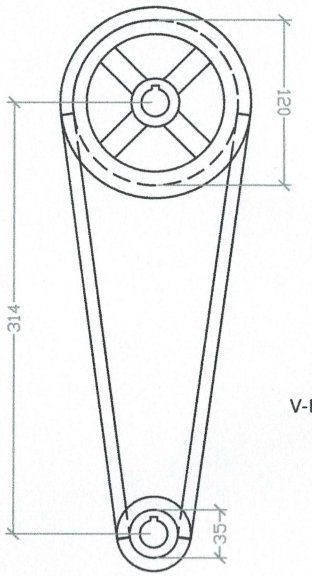

L = 2C+1.57(D+d)
= 2(314)+1.57(120+35)
= 628+1.57(155)
= 628+243.35
L = 871.35
V-BELT SIZE = B871 OR NEAR COMMERCIAL STANDARD SIZE

V-BELT B/W PRIME MOVER & BOTTOM FEEDER ROLLER
SCALE: 1:4 MM

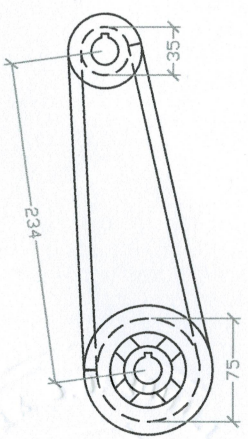

L = 2C+1.57(D+d)
= 2(234)+1.57(75+35)
= 468+1.57(110)
= 468+172.7
L = 640.7
V-BELT SIZE = B641 OR NEAR COMMERCIAL STANDARD SIZE

V-BELT B/W BRUSHER LINKED PULLEY & GEAR PULLEY
SCALE: 1:4 MM

NOTES:
Fabricator shall verify all dimensions and parts before all works are to begin.

Distances of V-belt pulleys may be changed or adjusted in actual upon fabrication of the machine based on commercial standard sizes of the pulleys and V-belt.

Need actual verification before installation of parts.

OWNER:	PROJECT TITLE:	SHEET CONTENTS:	DRAWN BY:	RECOMMENDING APPROVAL:	APPROVED BY:	SHEET NO.:
PHILIPPINE FIBER INDUSTRY DEVELOPMENT AUTHORITY 3/F PCAF BUILDING, DA COMPOUND, ELLIPTICAL ROAD DILIMAN, QUEZON CITY	BAMBOO FIBER EXTRACTING MACHINE	AS SHOWN	ENGR. CLARK B. BARQUILLA CHECKED BY: ENGR. RAMIL B. BARCELONA	CLARK B. BARQUILLA PROFESSIONAL AGRICULTURAL & BIOSYSTEMS ENGINEER PRC: 7711 PTR: TIN: DATE EXPIRED: APRIL 28, 2023	REMEDIOS V. ABGONA, PhD CHIEF, FIBER UTILIZATION AND TECHNOLOGY DIVISION	KENNEDY V. DOLOSALES EXECUTIVE DIRECTOR III	16 20

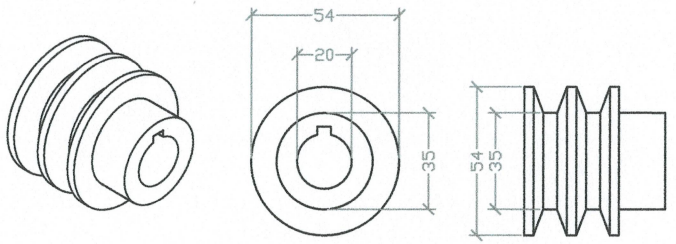

PRIME MOVER V-BELT PULLEY
SCALE: 1:2 MM

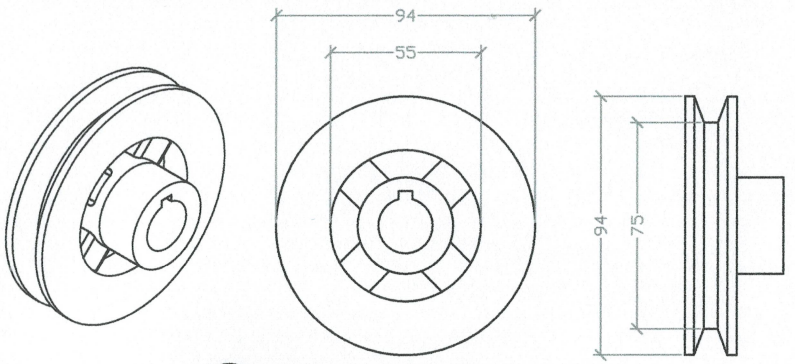

BRUSHERS LINKED V-BELT PULLEY
SCALE: 1:2 MM

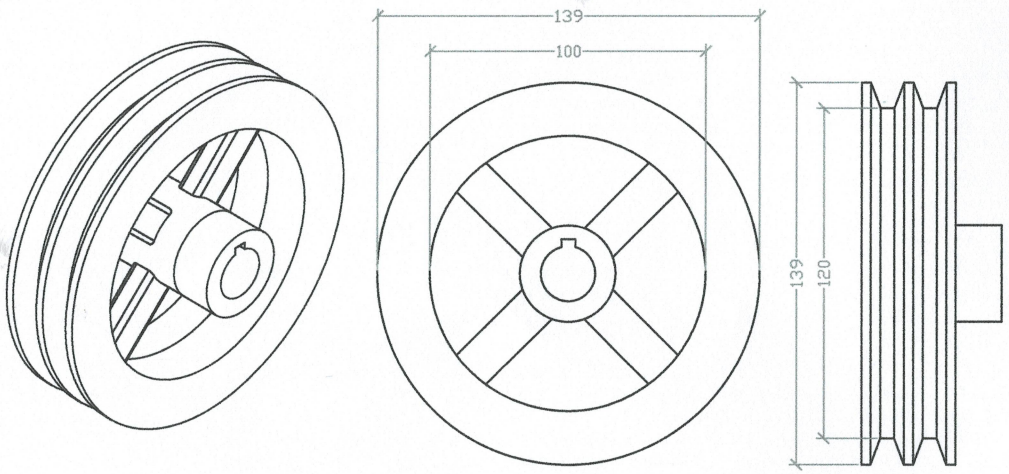

BOTTOM FEEDER ROLLER V-BELT PULLEY
SCALE: 1:2 MM

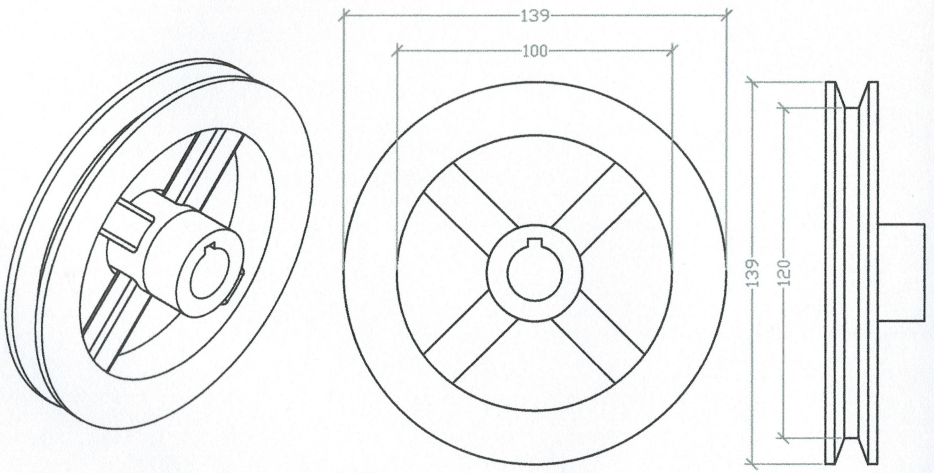

BOTTOM DISCHARGE ROLLER V-BELT PULLEY
SCALE: 1:2 MM

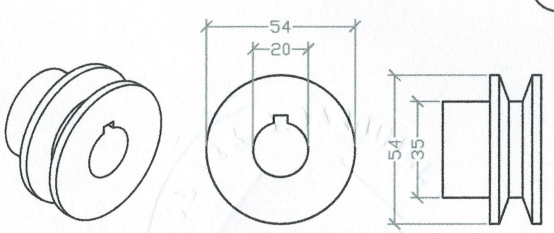

GEAR V-BELT PULLEY
SCALE: 1:2 MM

NOTES:
Fabricator shall verify all dimensions and parts before all works are to begin.

Subject to actual verifications.

OWNER:	PROJECT TITLE:	SHEET CONTENTS:	DRAWN BY:	RECOMMENDING APPROVAL:	APPROVED BY:	SHEET NO.:
PHILIPPINE FIBER INDUSTRY DEVELOPMENT AUTHORITY 3/F PCAF BUILDING, DA COMPOUND, ELLIPTICAL ROAD DILIMAN, QUEZON CITY	BAMBOO FIBER EXTRACTING MACHINE	AS SHOWN	ENGR. CLARK B. BARQUILLA CHECKED BY: ENGR. RAMILO BARCELONA	CLARK B. BARQUILLA PROFESSIONAL AGRICULTURAL & BIOSYSTEMS ENGINEER PRC: 7711 PTR: TIN: DATE EXPIRED: APRIL 28, 2023	REMEDIOS V. ABGONA, PhD CHIEF, FIBER UTILIZATION AND TECHNOLOGY DIVISION	KENNEDY C. MOSTALES EXECUTIVE DIRECTOR III	17 20

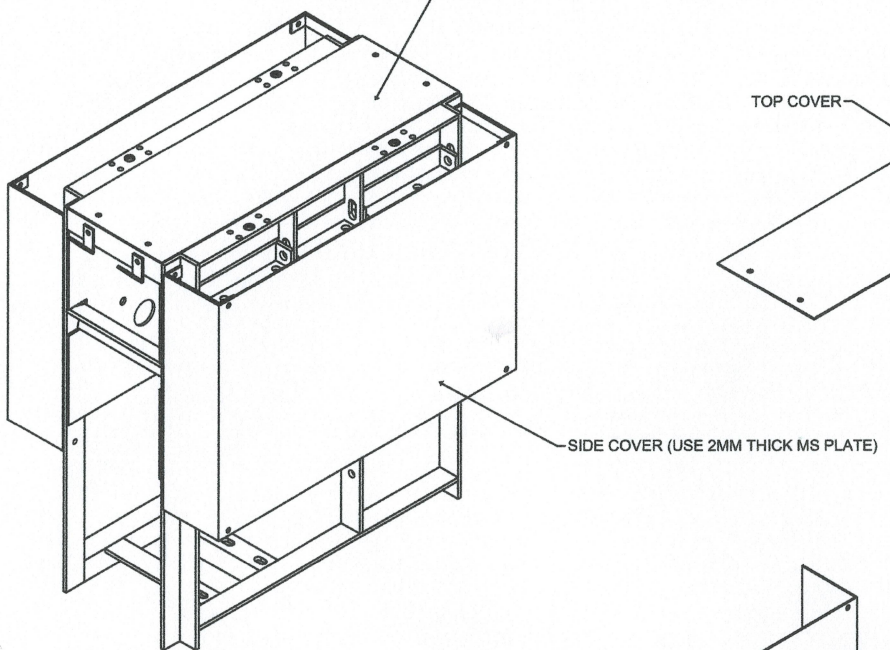

RIGHT SIDE PERSPECTIVE VIEW
SCALE: 1:8 MM

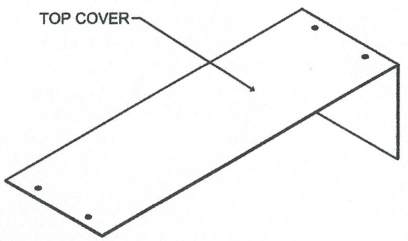

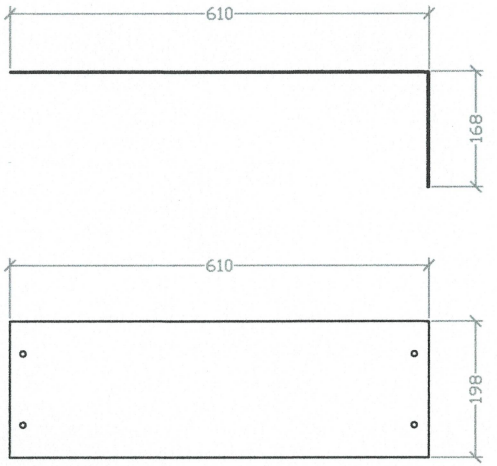

TOP COVER SPECIFICATION
SCALE: 1:8 MM

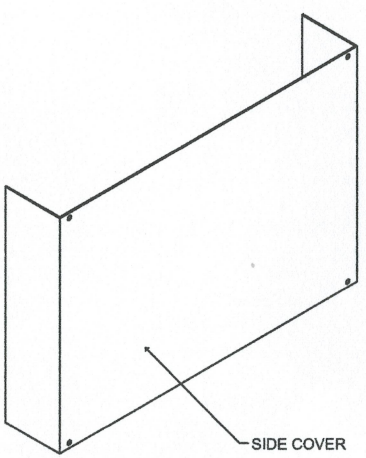

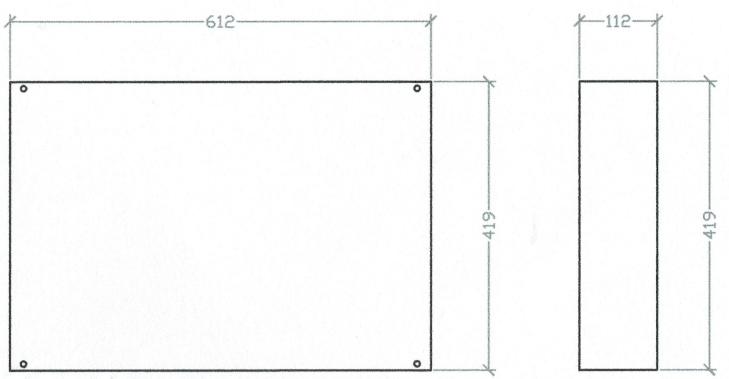

SIDE COVER SPECIFICATION
SCALE: 1:8 MM

NOTES:
Fabricator shall verify all dimensions and parts before all works are to begin.

Subject to actual verifications.

OWNER:	PROJECT TITLE:	SHEET CONTENTS:	DRAWN BY:		RECOMMENDING APPROVAL:	APPROVED BY:	SHEET NO.:
PHILIPPINE FIBER INDUSTRY DEVELOPMENT AUTHORITY 3/F PCAF BUILDING, DA COMPOUND, ELLIPTICAL ROAD DILIMAN, QUEZON CITY	BAMBOO FIBER EXTRACTING MACHINE	AS SHOWN	ENGR. CLARK B. BARCOILLA CHECKED BY: ENGR. RAMIL B. BARCELONA	CLARK B. BARCOILLA PROFESSIONAL AGRICULTURAL & BIOSYSTEMS ENGINEER PRC: 7711 PTR: TIN: DATE EXPIRED: APRIL 28, 2023	REMEDIOS V. ABGOMA, PhD CHIEF, FIBER UTILIZATION AND TECHNOLOGY DIVISION	KENNEDY T. COSTALES EXECUTIVE DIRECTOR III	18 20

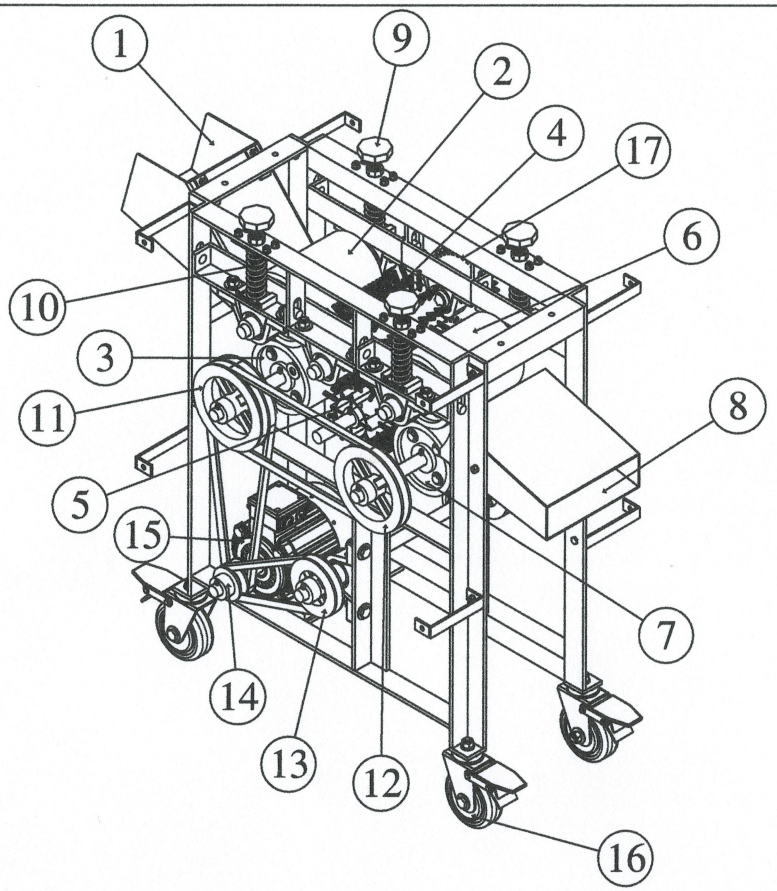

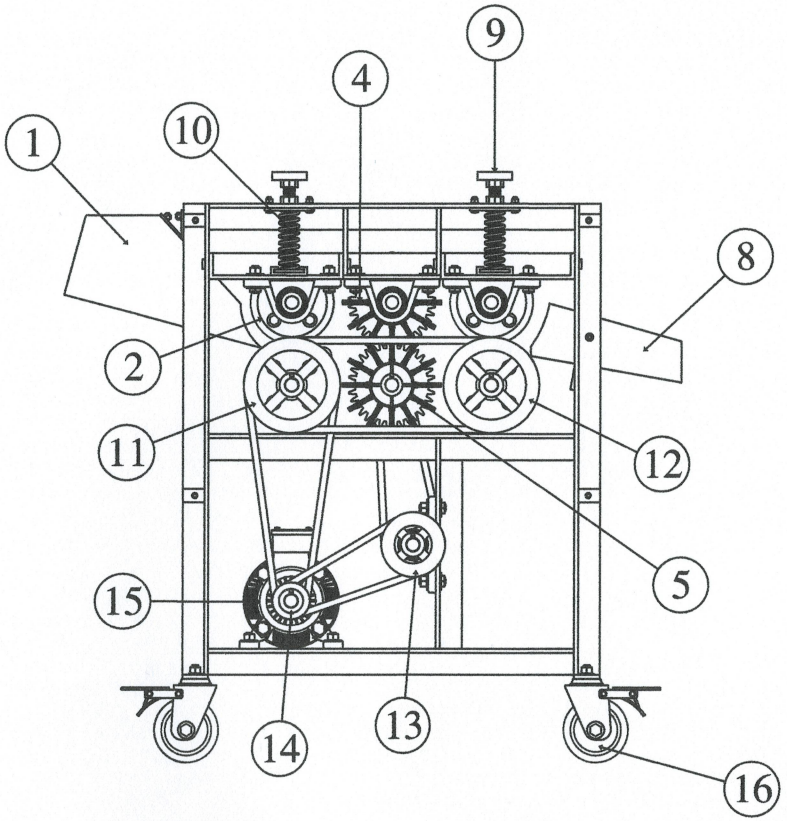

LEGEND:

1. FEEDING CHUTE
2. TOP FEEDER ROLLER
3. BOTTOM FEEDER ROLLER
4. TOP BRUSHER
5. BOTTOM BRUSHER
6. TOP DISCHARGE ROLLER
7. BOTTOM DISCHARGE ROLLER
8. FIBER CHUTE
9. CLEARANCE ADJUSTER
10. SPRING TENSIONER
11. BOTTOM FEEDER ROLLER V-BELT PULLEY
12. BOTTOM DISCHARGE ROLLER V-BELT PULLEY
13. BRUSHERS LINKED V-BELT PULLEY
14. PRIME MOVER V-BELT PULLEY2HP
15. 2HP ELECTRIC MOTOR
16. TRANSPORT WHEEL
17. GEARS

NOTES:
Fabricator shall verify all dimensions and parts before all works are to begin.

Subject to actual verifications.

OWNER:	PROJECT TITLE:	SHEET CONTENTS:	DRAWN BY:	RECOMMENDING APPROVAL:	APPROVED BY:	SHEET NO.:
PHILIPPINE FIBER INDUSTRY DEVELOPMENT AUTHORITY 3/F PCAF BUILDING, DA COMPOUND, ELLIPTICAL ROAD DILIMAN, QUEZON CITY	BAMBOO FIBER EXTRACTING MACHINE	AS SHOWN	ENGR. CLARK B. BARQUILLA CHECKED BY: ENGR. RAMON B. BARCELONA	CLARK B. BARQUILLA PROFESSIONAL AGRICULTURAL & BIOSYSTEMS ENGINEER PRC: 7711 PTR: TIN: DATE EXPIRED: APRIL 28, 2023	REMEDIOS V. ABGONA, PhD CHIEF, FIBER UTILIZATION AND TECHNOLOGY DIVISION	KENNEDY T. GOSTALES EXECUTIVE DIRECTOR III	19 20

BAMBOO FIBER EXTRACTING MACHINE MECHANISM

HOW IT WORKS?

The following are the series of operations of the Bamboo Fiber Extracting Machine:

1. The feeding chute is angled at 15 degrees (for verification the angle of repose) inclination in order for the treated bamboo slats to slide down to the roller feeders without the assistance or pushing action by the operator.

2. The bamboo slats will pass through the roller feeders that rotate opposite to each other. The spring tensioner is provided at the top of roller feeder to flatten first the bamboo slats before passing to the brushers. Only the shaft of bottom roller feeder connected to the prime mover (electric motor, approx. 2 HP), since the top roller feeder will rotate through the aid of friction once it touch the bottom roller feeder or bamboo slats while passing between the two rollers.

3. After the first end of the bamboo slats passed the roller feeders, it will continue to pass to the brushers that made of two rotating nylon fiber brushers that oppositely rotating to each other. The brushers rotate faster than the roller feeders, in order for the brushers to have enough time to brush the bamboo slats into fiber while the roller feeder holding and gradually releasing the bamboo slats.

4. Then, the fiber will pass through the rollers discharge by pressing the fiber to have a smooth texture. The rotating speed of roller discharge is the same with roller feeder.

5. Finally, the fiber will be discharged in the fiber chute.

NOTES:
Fabricator shall verify all dimensions and parts before all works are to begin.

Subject to actual verifications.

OWNER:	PROJECT TITLE:	SHEET CONTENTS:	DRAWN BY:	RECOMMENDING APPROVAL:	APPROVED BY:	SHEET NO.:
PHILIPPINE FIBER INDUSTRY DEVELOPMENT AUTHORITY 3/F PCAF BUILDING, DA COMPOUND, ELLIPTICAL ROAD DILIMAN, QUEZON CITY	BAMBOO FIBER EXTRACTING MACHINE	AS SHOWN	ENGR. CLARICE B. BARQUILLA PROFESSIONAL AGRICULTURAL & BIOSYSTEMS ENGINEER PRC: 7711 PTR: TIN: DATE EXPIRED: APRIL 28, 2023 CHECKED BY: ENGR. RAMIL B. BARCELONA	REMEDIOS V. ABGONA, PhD CHIEF, FIBER UTILIZATION AND TECHNOLOGY DIVISION	KENNEDY A. COSTALES EXECUTIVE DIRECTOR III	20 20